SIMULIA

Realistic Simulation News

January/February 2011
www.simulia.com



Baker Hughes Reduces Analysis Time from Months to Days

Trek Bikes
Designs Greener Bikes
Page 6

Stutzki Engineering
Breaks Architectural Barriers
Page 10

Verney Yachts
Catching the Wind with CAE
Page 16

DS SIMULIA

SIMULIA
Realistic Simulation News

January/February 2011

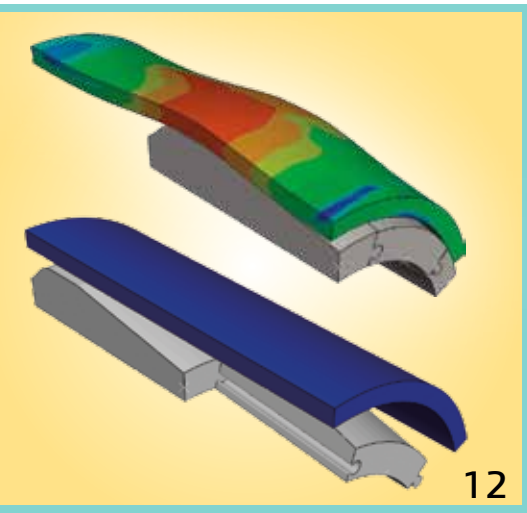



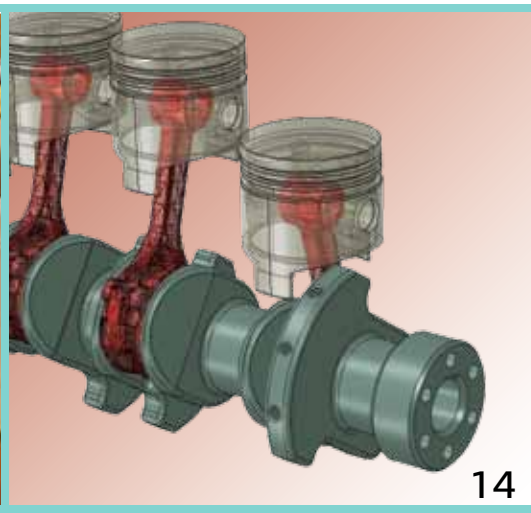

Inside This Issue

12 Cover Story
Baker Hughes Reduces Analysis Time from Months to Days
On the cover: Jeff Williams

4 Customer Viewpoint
Kimberly-Clark Simplifies Analysis Methodology with SLM

14 Product Update
Abaqus 6.10-EF and Isight 5.0

In Each Issue

3 Editor's Letter
SCC Paper Downloads

6 Customer Case Study
Trek Bikes Designs Greener Bikes Faster with DS Solutions

8 Strategy Overview
Alex Van der Velden, Product Manager, Isight/SEE

10 Solution Brief
Stutzki Engineering Breaks Architectural Barriers

16 Customer Spotlight
Verney Yachts Is Catching the Wind with CAE

19 Alliances
- Isight Component Development Tools
- SIMULIA Partner Day

20 Academic Update
- Virginia Tech
- SIMULIA Learning Community

22 Tips & Tricks
SIMULIA DesignSight

23 Events
2011 SIMULIA Customer Conference

SIMULIA Realistic Simulation News is published by
Dassault Systèmes Simulia Corp.
Rising Sun Mills
166 Valley Street
Providence, RI 02909-2499
Tel. +1 401 276 4400
Fax. +1 401 276 4408
simulia.info@3ds.com

www.simulia.com

Editor
Tim Webb

Associate Editor
Karen Curtis

Contributors
Jeff Williams (Baker Hughes), Tim Clark (Verney Yachts), Chris Pieper (Kimberly-Clark), Chris Stutzki and John Knowles (Stutzki Engineering), Bob West (Virginia Tech), Parker Group, Alex Van der Velden, April Alfieri, Matt Ladzinksi, Tom Battisti, and Rachel Callery (SIMULIA)

Graphic Designer
Todd Sabelli

The 3DS logo, SIMULIA, CATIA, 3DVIA, DELMIA, ENOVIA, SolidWorks, Abaqus, Isight, and Unified FEA are trademarks or registered trademarks of Dassault Systèmes or its subsidiaries in the US and/or other countries. Other company, product, and service names may be trademarks or service marks of their respective owners.
Copyright Dassault Systèmes, 2011.

JAN_SIM_411_VOL 1

SIMULIA

Editorial

Introducing Realistic Simulation News



Karen Curtis
Associate Editor

You may have noticed the new look and new name for our magazine. The new design continues to keep the spotlight on you, our customers, but also puts the focus on our commitment to delivering innovative realistic simulation solutions. It is our goal to continue to improve our delivery of high-quality technical content that you have enjoyed over the years from our traditional *INSIGHTS* magazine.

This first issue of *SIMULIA Realistic Simulation News* focuses on Isight, our product for process automation and design optimization. The cover story highlights how Baker Hughes (p. 12) is leveraging the Design of Experiments capability of Isight to quickly assess the impact of design variables to find the optimal sloution and significantly reduce the product design cycle. On page 8, Alex Van der Velden, SIMULIA product manager for Isight/SEE, details an experiment, conducted at an optimization training session that produced very interesting results showing the importance of realistic optimization.

To learn more about customer applications using Isight, visit our website to download the 2010 SIMULIA Customer Conference papers listed on this page.

While this issue is focused on Isight, it also provides customer stories on unique Abaqus FEA applications that are sure to be of interest such as how Stutzki Engineering (p. 10) is analyzing structural glass to make it a strong and durable, yet beautiful, part of architectural designs. Plus, discover news about our new Learning Community (p. 21).

As with our SIMULIA Customer Conference coming this May in Barcelona (p. 23), the ongoing quality of our magazine would not be possible without the participation of our valued customers. I look forward to seeing many of you at the 2011 SCC.

Sincerely,

Karen Curtis

P.S. I hope you enjoy our newly designed magazine. Your suggestions are welcome via email to simulia.editor@3ds.com

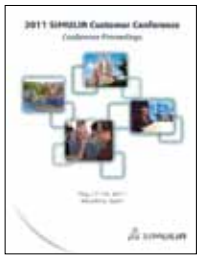

Download SIMULIA Customer Conference papers that provide details on how our customers are applying Isight for process automation and design optimization.

General Dynamics-Electric Boat Corporation—*Optimization of a Ring-Stiffened Cylinder*

This paper documents the use of Isight and Abaqus to perform a weight optimization for static pressure loading on a ring-stiffened cylinder, varying geometry and model thicknesses. The use of Isight to run the analysis allows Electric Boat to find an optimized design earlier in the design process.

INERGY Automotive Systems Research—*Benefits of Simulation Process Automation for Automotive Applications*

The use of Isight to automate Inergy's simulations related to automotive plastic fuel tank development is highlighted by the static venting simulation, the tank-aging simulation and the blow-molding simulation.

Pan Asia Technical Automotive Center Co., Ltd.—*Advanced Body in White Architecture Optimization*

Isight's DOE design drive is used to assess the impact of variables on the objectives, the approximations component is used sequentially to create fast running surrogate models and the optimization tool is used to perform a trade-off study.

Rolls-Royce—*Simulation Driven Design Enabling Robust Design*

The airplane engine business is a highly competitive market and gas turbine engines are at the leading edge of technology development. The application of optimization techniques and simulation-driven design during the development of engines has become a standard practice.

For More Information
www.simulia.com/cust_ref

Simulation Lifecycle Management Solves the Hard Challenges of "Soft" Products

Chris Pieper, Associate Research Fellow, Kimberly-Clark Corp.



3D model in Abaqus of a baby's torso and a diaper. During simulation the torso will be put in motion and the behavior of the diaper analyzed.

The products we design at Kimberly-Clark may be feather-light, but they're as demanding to develop as any bike frame or truck chassis. Our company has always focused on thin, "soft" products, from paper and newsprint in the 1870s to today's multi-billion dollar global brands—Huggies®, Kleenex®, Scott® and Depend®, among others. Unlike the newsprint of yesteryear, however, these products often depend on accurate, comprehensive simulation to ensure optimum performance.

The materials we use now (paper, cloth, polymers, and custom composites) can be highly nonlinear, anisotropic, and undergo large strains while in use. Predicting the complex deformation of our products as they interact with people and the surrounding environment generates an immense volume of simulation files and data. In recent years this had built into a daunting challenge: How could we explore, manage, and re-use it most efficiently?

The data we needed to organize was not just high-volume; it was decentralized between a CAE modeling team in Neenah, Wisconsin, and analysts in Roswell, Georgia, and Seoul, South Korea. Initially we tried to administer everything with simple methods such as defined file structures and naming conventions, but it was still difficult to find and confirm the latest version of a simulation. Clearly, we needed robust data management if we wanted to track and review previous analyses.

Selecting SLM

Since we already used Abaqus as our primary FEA software, it made sense to approach SIMULIA about implementing their Simulation Lifecycle Management (SLM) solution. With SIMULIA's help, we went through a checklist of our criteria: easy configurability, out-of-the-box capability, data search and retrieval, compatibility with our existing hardware and infrastructure, and customer support.

The new SIMULIA solution clearly offered us a way to streamline our processes, automating the steps that didn't require expertise and freeing analysts to focus on the simulations themselves. We designed our analysis process so that it would be scalable and as efficient as possible.

Building a simulation cycle

To organize our analyses, Kimberly-Clark used SLM to set up a series of process templates, all based on a simple format for building models, running them, and post-processing the results. Our system works like this:

Someone brings us a proposed design of a diaper, for example. Ideally they have already created a digital model and specified a material; that gives us the data we need to go forward.

Next we combine the diaper geometry and the material characteristics with a human torso simulation. We can re-use a virtual human from the existing SLM library and, increasingly, we can modify existing 3D product designs and material characteristics files to create a full, well-defined model for analysis.

The analyst also chooses an SLM template that most closely fits the task. Each is based on a generic template of our workflow: Build Model, Run Model, and Auto Post (Process). One option is selecting a template that allows a Restart Analysis (to consider multiple use cases or to change loads, interactions, and boundary conditions). During the Build Model phase, SLM can automatically load the required model into Abaqus/CAE and extract data from input files, based on file import and export rules defined by the user. Outputs from the Build Model phase include the completed model file for running and the Abaqus input file(s).

Run Model manages the actual analysis. Because SIMULIA SLM is adaptable to multiple template formats, the analyst can

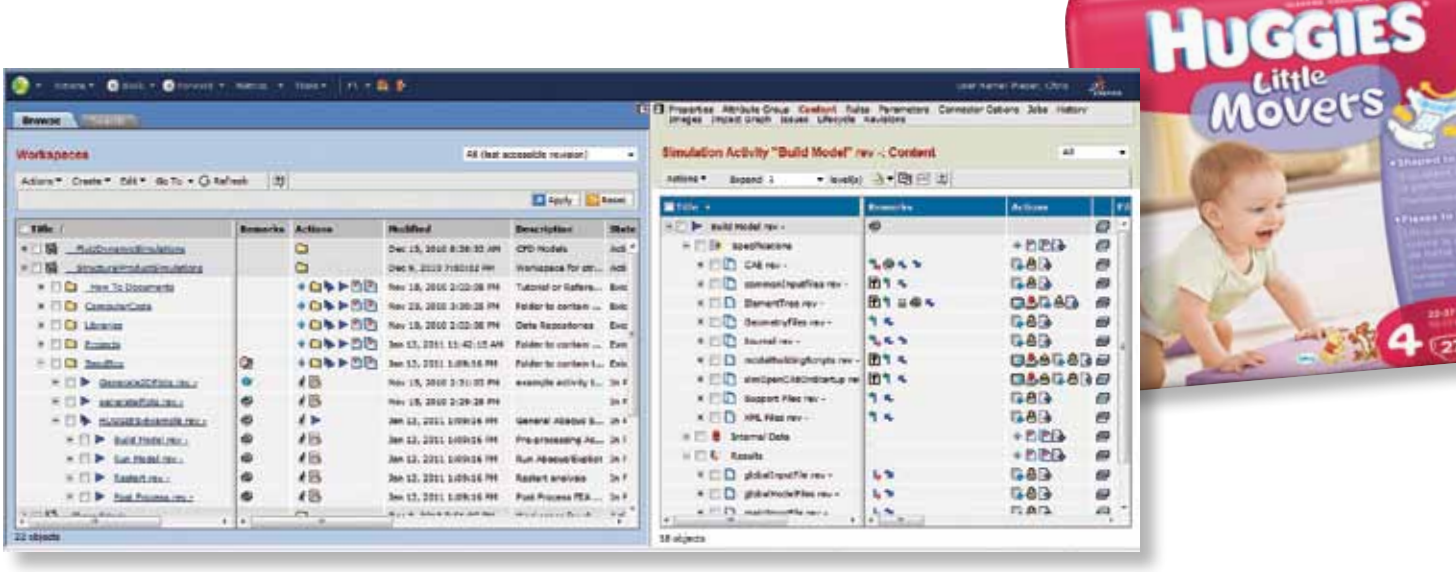

Screenshot of Simulation Lifecycle Management (SLM) as used at Kimberly-Clark. On the left is a table of the simulation workspaces being managed in SIMULIA SLM. On the right is a table showing "Build Model" activity. SLM software automates many of the common tasks of creating models for analysis.

re-configure the template for incremental changes in workflow that best suit the current simulation. In the case of the diaper, there may be gasket components that need to be motion-tested to ensure that they don't "gap away" from the skin and create a pathway for leakage. There are many different stresses and loads on the material, and a number of shape changes to be considered as the human body moves. The SLM application automates the analysis and can run it on a remote cluster for maximum computing speed.

Auto Post returns the results to the analyst's workstation and, using Abaqus Viewer and either a fully automated, semi-automated, or user-interactive procedure, creates output in forms defined by the template for the convenience of the end-user, normally a product developer.

Multiply this single example by thousands of simulations, and you'll see why SLM has radically transformed and simplified our analysis methodology.

From months to minutes

Now we can perform more tasks at once, confident that the software is automatically tracking changes and versions accurately and organizing revisions for later review and use.

SIMULIA SLM has helped us speed up our modeling through process standardization and greatly improved search capabilities. Formerly, developing and assembling a complex model could take up to a month. With the tools and techniques we've developed and the data libraries we've accumulated, we can build these models in minutes.

But our greatest time savings isn't in the multi-tasking, nor in the FEA simulations we've streamlined. It's in the ones we don't have to repeat at all, because a previous analysis is available with pedigreed data and retrievable results.

With our entire team having transitioned from our old tool set, we see additional potential opportunities for using SLM. We plan to integrate it with our home-grown code and with other simulation software. We'll also continue to scale up SLM, adding more users and compiling more data. Now that we have efficient simulation data management, our huge libraries of information have gone from a daunting challenge to a treasured, time-saving resource. Many Kimberly-Clark products may be disposable but, with SLM, our analyses of them can now be recycled. We feel this offers us significant cost and time savings in our product development.



***Chris Pieper** has been an engineer and an analyst at Kimberly-Clark for 23 years. His hobbies include scuba diving (an outgrowth of his years as a Navy diver on board the nuclear submarine USS Pollack), flying a private plane, and earning a first and second degree black belt in karate. Chris also owns a farm, where he grows apples and makes maple syrup.*



Neenah, Wisconsin



Roswell, Georgia



Seoul, South Korea

For More Information

www.kimberly-clark.com
www.simulia.com/cust_ref

Trek Designs Green Bikes Faster *with* DS PLM Composites

Trek Bikes is a global leader in the field of competitive cycling, offering some of the top-performing designs on the market. Composite materials are an important part of making racing bikes light, fast and strong, and Trek depends on DS PLM to design and manufacture composites solutions that keep its bikes ahead of the pack.

By Jerry Fireman





CATIA and SIMULIA help us make better decisions, which give us more control over the outcome of our products.

Mark Wilke
Chief Process Engineer-Composites, Trek Bikes

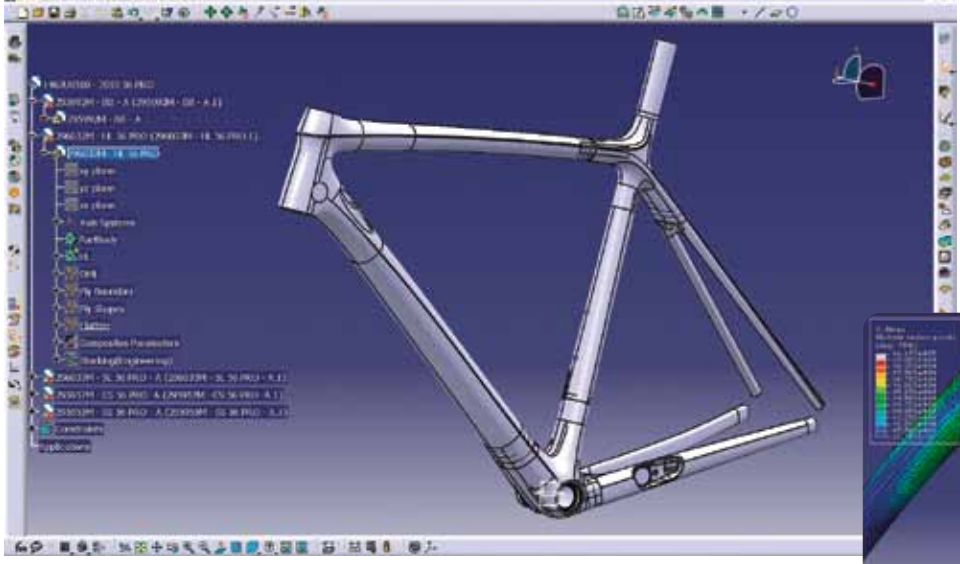

The 2010 Madone full-frame model is imported from Trek's current 3D software and then used to place ply information on the 3D model for analysis using Simulayt and Abaqus.

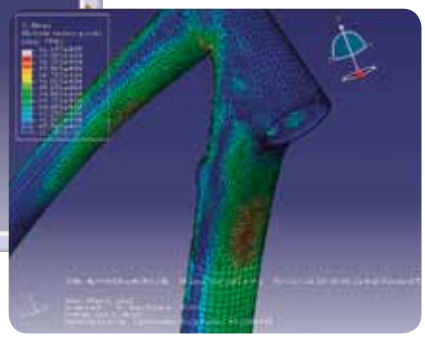

A mesh of an analysis that Trek used to develop an optimized laminate for a HL on their 2010 Madone Platform.

Bicycle manufacturers race to be first across the finish line with cool-looking designs and new features. In the world of high-performance cycling, Trek Bikes has been synonymous with innovation since 1989, when the company unveiled its first molded carbon-fiber frame.

Today, Trek continues to innovate, producing lighter, stylish new designs with complex geometries that provide advantages unique to Trek. For example, the frame of the company's 2010 Madone bike is more than 5 ounces (150 grams) lighter than its predecessor, yet 17% stiffer for more confident handling at speed. Every 6 Series Madone is built with Trek's most sophisticated carbon fiber—OCLV Red, which enhances performance but significantly complicates lay-up processes and schedules.

"The multitude of innovations that our industrial designers and design engineers come up with force us to engineer increasingly more complicated and difficult composite frame solutions," says Mark Wilke, chief process engineer-composites. "Traditional design and lay-up methods aren't up to the challenge of creating innovation at the pace needed to maintain our leadership position."

Seamless transition to analysis

To save time, improve quality and beat its competitors to market, Trek performs design, virtual testing and manufacturing process evaluation in a single, unified CATIA environment. The ply layout is developed in CATIA Composites Design (CPD) by creating ply tables and composite cross-sections. The finite element model is prepared within CATIA Advanced Meshing Tools. Simulayt Composite Modeler provides bidirectional integration of the CATIA Composites model into the SIMULIA finite element analysis (FEA) software.

"The seamless transition from CATIA into SIMULIA Abaqus makes it possible to analyze many more design concepts by eliminating the need for data translation," Wilke said. "This helps us get lighter and stronger designs to market faster."

Abaqus analyzes the stiffness and load of different laminates to qualify frames to industry and Trek standards. Realistic simulation enables Trek engineers to compare the performance of multiple laminate designs virtually, and only send the best for physical prototyping and structural testing. This saves significant time and cost, yet allows Trek to try more laminate solutions than previously possible. Reducing the use of physical prototypes not only reduces time and costs, but also eliminates wasted materials and reduces energy use, critical considerations in Trek's ongoing quest for improved sustainability and reduced environmental impact.

Improve the design before sending to the shop floor

Simulayt's Advanced Fiber Modeler, seamlessly integrated with CATIA, helps predict and correct fiber deformation in plies before the design is sent for cutting and lay-up. "In every case where we have used the new CATIA-based composite design process, we've been able to evaluate multiple ply lay-up options, select the one that met strength and durability requirements, and validate the manufacturing process in a fraction of the time," Wilke said. "This iterative laminate development process is taking only two days, compared to two weeks in the past. This enables us to evaluate more design alternatives in less time, which helps us get products to market faster."

But Trek sees even more potential to improve its processes and its products with DS solutions. "We have already utilized the powerful surfacing capabilities in CATIA to reduce the time needed to design manufacturing tools with complex curvatures," Wilke said. "CATIA's surfacing capabilities will become even more valuable as we utilize more complex shapes in our products. As a next step, we are considering implementing CATIA for Mold and Die, which should enable us to perform mold design and manufacturing engineering in the same CATIA environment for additional time and cost savings."

Focus on Inceptra

Inceptra is Trek's value-added reseller for DS solutions and worked hand-in-hand with Trek to configure a complete composites design and analysis solution that fit the bicycle maker's needs. "We have worked with other companies in the past whose attitude was: Here's the software—go use it," Wilke said. "Inceptra, on other hand, took the time to understand our design process and put together a toolset that's a great fit. Inceptra has also provided outstanding technical support."

For More Information
www.trekbikes.com
www.inceptra.com

"The Engineering of the Best is Always Yet to Come"

—H. Petroski, National Academy of Engineering, 2000

Alex Van der Velden, Product Manager Isight/SEE



Some of the most remarkable engineering advances have been achieved by individual ad-hoc experimentation, creativity and plain hard work. However, as the bar is set higher—in terms of reliability, durability, comfort, performance, efficiency, safety, and multi-disciplinary systems—easy progress in each engineering discipline is no longer a given.

To solve the engineering problems of this new century we will not only have to stand on the shoulders of those who have preceded us, but also allow others to stand on ours.

Limitations of ad-hoc engineering

While ad hoc engineering sounds exciting, it has demonstrable limits that came to light in an experiment conducted by myself and a team of engineers some years ago. As part of optimization software training, some fifty aerospace engineers in three groups were asked to determine the best set of 12 nodal coordinates in a truss structure in such a way that the weight of the truss was minimized (Fig. 1). The truss tubes were automatically thickness-dimensioned for buckling and maximum tensile stress, and the weight was to be computed in conjunction with the length of the tubes from the nodal coordinates. The twist was that the participants did not see the geometry, just the coordinates and the computed weight. The iterations were almost instant, but none of the engineers came anywhere close to the right answer in 15 minutes. We then enabled the geometry rendering and, within less than a few minutes, most produced what they thought was the design with the lowest weight. Obviously the visual representation of the design was critically important to success, and that is probably why our Dassault Systèmes motto is "See what you mean." What was surprising, though, was the range of answers. Some engineers had achieved a weight within 5% of the optimal value and others were 100% off. Experience obviously mattered.

Next, we asked the engineers to define the 12 coordinate sets as design variables, the weight as an objective and to select and use the optimization software to find the best design. Within a couple of minutes everybody pretty much had the same right answer, though admittedly some still struggled using this earlier version of Isight software. It was, however, striking that the formally optimized design was markedly different from the design produced by the best-experienced engineers. The reason for this was easy to explain. I asked the participants to change the objective from 'weight' to 'cost' and, voila, the result looked just like the designs for minimal weight the experienced engineers had come up with. Pretty much all truss structures we see are optimized for cost and not weight, and this bias greatly influenced their work. Isight offers engineers the possibility of non-intuitive breakthroughs, as illustrated by the Baker-Hughes article on page 12.

Application of the scientific method from concept to knowledge

Isight applies the scientific method to the problem of the search for a better (simulated) product performance and cost, and provides a formal framework to go from concept to knowledge. First of all, it enhances the experience base of the individual engineer. Instead of a few experiments we can now submit a hundred samples using the Isight Design of Experiments tool. To keep it real, SIMULIA allows you to execute this high volume of computations at acceptable cost because your Abaqus tokens consumption is typically reduced by 60% when you use Isight to drive your design. Since Isight is designed to work with popular grid software such as Platform LSF, engineers are able to run hundreds of simulations on massive grid hardware

while achieving realistic turnaround times. Using this process of automated design experimentation, the engineer can gain knowledge about which parameters are the most important for his problem. Next, he can create an interpolated model of these sample points using Isight's state-of-the-art approximation methods. The user now has the ability to interrogate the design space in real-time using Isight's Visual Design Driver (Fig. 2) to find the design he likes or, alternatively, to define a formal objective (such as weight minimization) with constraints and let the computer do the search.

However, if you only apply this cookie-cutter approach, a great opportunity for conceptual break throughs would be missed. In one case, a large customer told me that our software obviously doesn't work because it produces bad designs that don't function in the real-world. Nothing seemed wrong in their setup, and they were leveraging production in-house simulation tools. So I asked them what they thought was unrealistic in the designs the software produced. They told me that a particular part of the "optimized" design would obviously fail in real-life. I told them that the part of the simulation that missed the failure mode was obviously critical to the problem. After three months they called back saying that they found the bug in their simulation and that now completely different designs were found by the optimizer that they would never would have been able to find before.

Once a breakthrough is made, we need to focus on reproducibility so that your unique breakthrough becomes the next standard. Isight doesn't just give you a 'best' design but also stores the data and the simulation application process flow as well as the problem formulation and solution strategy that led to that design. According to Professor Jon Claerbout of Stanford University, the retention of the data and the computational environment is a critical aspect of the scientific method that allows others to verify, and build upon, our contributions.

By using Isight as part of SIMULIA's Simulation Lifecycle Management suite of products, the concept of sim-flow reproducibility can be scaled to the enterprise. This allows our customers to retain all of their intellectual property in the form of models, sim-flows and results in one central location, accessible and deployable by all.

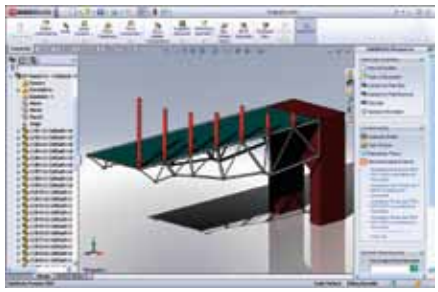

Figure 1. A SolidWork CAD model showing a truss design supporting a loaded bridge. The required size of the truss tubes depends on the coordinates of the truss nodes and the placement of the loads.

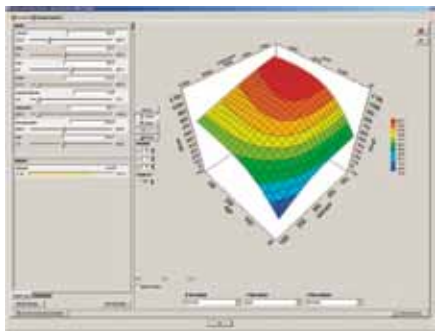

Figure 2. Isight's Visual Design Driver allows the user to make real-time design trade-offs. When the user moves the slides he can see the impact of changing the mixture of cement, slag, water, superplasticizer, aggregate and fine aggregate mixture on concrete compressive strength for the specific age of the concrete. At the same time, the sensitivity of the compressive strength versus selected parameters around the design point is visualized by the surface plot. Reference: dataset from Prof. I-Cheng Yeh, Department of Information Management, Chung-Hua University, Taiwan

There is no free lunch

Contrary to the claims of many, there is no single most efficient search algorithm for all problems. The widely accepted "no-free-lunch" theorem of Wolpert and Macready states that "…for any [optimization] algorithm, any elevated performance over one class of problems is exactly paid for in performance over another class". For us this has a profound influence on our optimization product strategy. First of all, this means that we have to provide many different algorithms to solve a wide variety of problems. For instance, we just added MISQP, a great algorithm to solve problems with both real (diameter of the bolt) and integer (how many bolts) variables. We recently licensed this algorithm from Dr. Klaus Schittowski, a world-renowned expert from the University of Bayreuth. For problems with just real variables, we have a new algorithm developed at SIMULIA called Pointer II that we fine-tuned recently to produce good improvements with less than 100 Abaqus runs. In addition, the Isight open-component architecture enables the development and integration of specialized third party algorithms independently from our product release cycle. Many partners throughout the world, such as MACROS and Scilab, are now working to leverage their own algorithms in Isight.

Quality matters

Deterministic or single-objective optimization is efficient, but it typically pushes the simulated behavior of the product towards one or more constraints until the constraints are active. With a design sitting on one or more constraint boundaries, even slight uncertainties in the problem formulation or changes in the operating environment could produce failed, unsafe designs, and/or result in substantial performance degradation in real operating conditions. For this reason, it is critical that stochastic effects such as operational, material, and load variations are considered when designing real-world products. The Isight Six Sigma suite helps ensure the high product quality needed by manufacturing companies, but obviously at the expense of a greater number of simulations.

The future is here, and I hope that you will give us the chance to show you how Isight can help you to engineer the next best thing for your successful company.



Dr. Alex Van der Velden
Product Manager Isight/ SEE, SIMULIA

Alex manages the Isight and the SIMULIA Execution Engine products and contributes to the overall SLM product strategy. In 1992 he started work at Airbus and introduced the use of optimization in many aerospace projects. In 1995 he founded Synaps, Inc., an early pioneer in the field of process integration and design optimization software. After Synaps was acquired by Engineous Software in 2004 he took over the responsibility for the development of the Isight product. Alex holds a Masters from Delft University and a Ph.D. in aerospace engineering from Stanford University.

For More Information
www.simulia.com/products/isight

Breaking Architectural Barriers with Structural Glass

Stutzki Engineering employs Abaqus FEA to help design the material in a new role

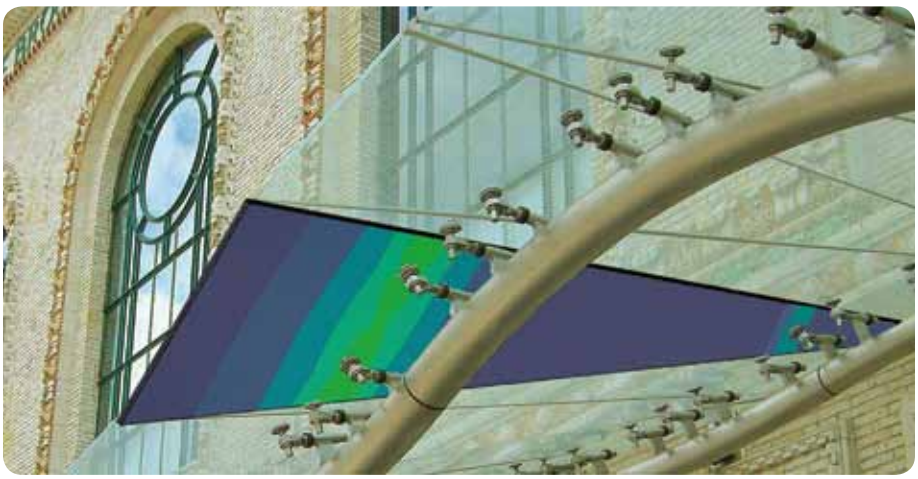

The architectural integrity of the Brooklyn Academy of Music's undulating glass and steel canopy dramatically demonstrates how point-supported glass can play a structural role in a building.

Glass breaks. When it reaches a certain stress level it doesn't yield, it shatters, without warning or predictable focal point. But mankind has been creating beauty and utility out of glass for over 4,000 years.

Until recently in modern architecture, the "building envelope" was dominated by steel and cement. Although glass was an integral component of almost every structure, windows and façades were there just to let in light or be purely decorative. But in the early 1990s, a movement towards incorporating a greater proportion of glass into structures began to take hold, enabled by new material formulas and installation technologies. These gave architects greater design freedom to bridge interior and exterior climates.

Glass goes beyond mere aesthetics

As glass has moved closer to center stage in architecture, it has also taken on a new role as a structural, load-bearing component. Heavy steel supports, and strong aluminum mullion systems that capture glass panes by their edges, are now making way for thin cables, glass fins and point-supported glass (PSG).

PSG attaches directly to a structure with bolted fittings that run through holes in the glass itself. It can be tempered, laminated and built to different thicknesses to bolster it for its new supporting job. Yet because PSG is now an intimate part of the building envelope, its installation and long-term performance must be finely tuned. The stress and strain in the glass, as it shoulders weight and interacts with the materials it's attached to, must be accurately predicted and accommodated through every season and weather extreme.

Despite considerable success in Europe, adoption of PSG has been slower in North America. "The methods for working with PSG are not yet found in any code or standard in this country," notes Chris Stutzki, founder of Milwaukee, Wisconsin-based Stutzki Engineering Inc. "Basically you have to rely on your own due diligence because this technology is so advanced. Those of us who work with PSG undertake extensive peer reviews that insist on predictive failure scenarios. Engineered responses are at the center of designing with glass."

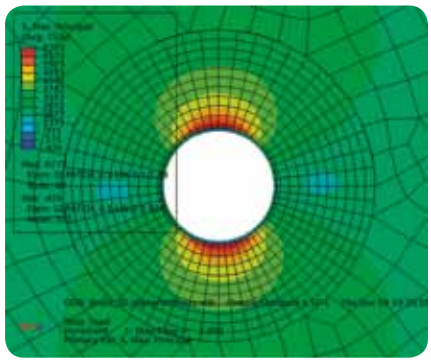

Abaqus FEA image of the "glass patch" area around the chamfered hole in a glass lite. Note the tighter meshing around the center of the hole, used to achieve the greatest predictive accuracy where stress is highest. The stress distribution is horizontal across the opening (rather than completely circular) due to the glass' propensity to bend slightly.

Modern twist on Brooklyn building features glass in a novel role

A particularly striking example of Stutzki Engineering's mastery of PSG is the firm's work on the glass canopy of the Brooklyn Academy of Music (BAM, architect: H3 Hardy Collaboration Architecture), chosen as a "Best Small Project Under $10 million" by New York Construction.

The original BAM building was given a modern twist in 2008 with a long, undulating glass ribbon canopy across its front. The 132-foot canopy is made up of 65 triangular panes (also known as "lites") of one-inch thick, laminated (a soft polymer interlayer sandwiched between two glass plies), tempered glass. Aligned head-to-toe, each "lite" weighs 500 pounds.

Each pane is pierced by three rotating points (two at its base, one at its apex). The points are connected via spring-loaded shock-absorbers to two waveform, 12-inch diameter, stainless-steel tubes. The tubes tie back to steel columns that penetrate the front wall of the building and are grounded indoors. The glass is part of the main structural system of the canopy: It carries the tension of the triangular system back into the upper steel pipe along the front wall.



Abaqus FEA of deflection (left) and field stress (right) in a single glass lite in the canopy. These analyses are incorporated into full-scale models of the entire canopy to ensure structural integrity.

Defining the loads, modeling the stresses

The engineers' first task in creating the canopy was to define its load path. "We started by asking the question, what happens if one glass ply fails?" says John Knowles, project engineer for Stutzki Engineering. The first line of defense against such an event was the laminated glass itself—if one ply were to break, the remaining ply had to take over the full load. The second line of defense was structural redundancy—if one entire glass lite broke, could its neighbors take over? "We needed to avoid a 'zipper effect' where a single failure would lead to total collapse of the structure," says Knowles.

Full-scale computer modeling of the entire canopy structure was performed with the German structural beam analysis program RSTAB. But in tandem with this "big picture" analysis, in order to focus in on the stresses affecting the critical glass lites and steel connections, Stutzki Engineering used Abaqus Finite Element Analysis (FEA). "Stress peak analysis with FEA, validated with physical testing, is essential for safe glass design," says Stutzki.

For greatest accuracy in identifying the stress peaks where the points are installed, particularly fine FEA meshing around the chamfered edges of the holes in the glass was employed using the CAE meshing module in Abaqus. In this case the group did not use the software's automatic mesh refinement but rather "seeded" regions separately to control mesh density in this "glass patch" area. "When meshing our models, we took particular pains to define the interface between the washer and the glass and determine whether to link the elements using single ties, or full contact," says Knowles. "We concluded that using multiple contact definitions between glass and the point fasteners was the only way to accomplish realistic stress results. Although it takes a bit more compute time, we can run our models with the equipment we have in our office and we get very accurate results."

Abaqus was also employed to model an entire glass lite so that the different loads on a complete pane could be analyzed and incorporated into the design of the full canopy. A typical model used 106,088 C3D8I elements (four elements over the thickness of each laminated glass ply, one element of thickness for the interlayer between two plies) with close to two million degrees of freedom.

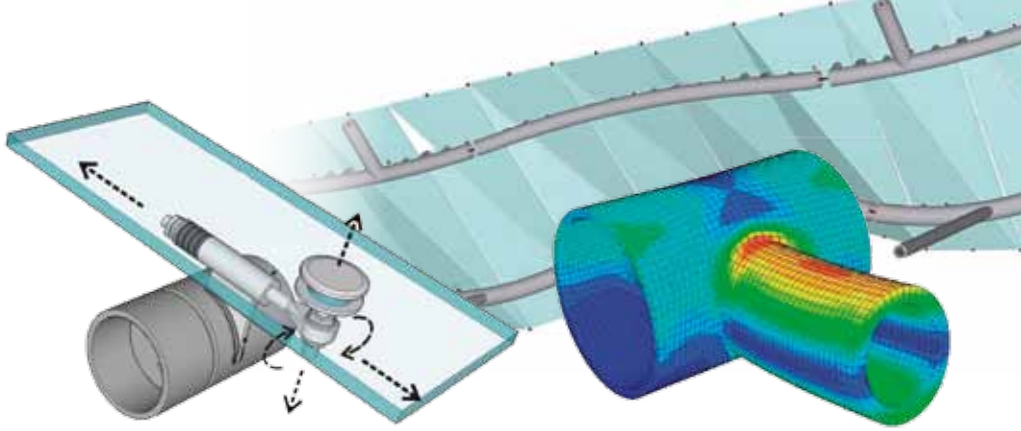

The glazing bracket (left) is designed to provide ductility as the glass responds to the loads in the canopy structure. Stutzki Engineering uses Abaqus FEA (right) to analyze the steel components in the canopy, as well as those that are glass.

Abaqus FEA simulates critical fittings

Abaqus was used to prove out the design of the all-important glazing bracket as well. This included the nylon washers that prevent direct steel-to-glass contact, the pivoting steel points themselves, and the Belleville springs that act like shock absorbers. The standard material models available in Abaqus were used to define the homogenous materials (nylon, glass) used in the models. For modeling steel connections however, the Stutzki engineers typically use elastic plastic material definitions. "The complete bracket fitting is designed to introduce the ductility that is missing from glass alone," says Knowles. "Using Abaqus to analyze the behavior of the various components lets us visualize all the different forces affecting the glass. With steel alone it's not a problem because it yields a bit when overloaded. But with sensitive glass pieces, we need to predict exactly what force is going into each pane."

Additional stresses on the PSG structure, including minute movement in both the steel tubes and the building walls, and the more significant effects of temperature and loading over time, were also accounted for in the structural analyses.

Proving out the loads with real-world testing

To validate the analyses of all their PSG projects, Stutzki Engineering has conducted extensive real-world testing at the Milwaukee School of Engineering. By gluing strain gauges around the holes in glass lites and then applying hundreds of pounds of point pressure with a loading ram, the team has measured physical stress within different configurations of panes and compared the test results to the predictions of their FEA models.

Using the Abaqus capability to integrate Python scripting, the group has been able to automatically run multiple permutations and combinations of load cases. Not only did this help them cut modeling time from a day to an hour, it also enabled them to pinpoint the modeling methods and design configurations that best correlate with real-world tests. This gives Stutzki Engineering the confidence to use the models as proven knowledge-templates for their PSG design work going forward.

Installation is the final challenge

With their BAM canopy and fitting designs verified and finalized, Stutzki Engineering still needed to ensure that the structure was installed properly. The canopy's glazing brackets needed to be "tuned" during installation so that all forces and moments were transferred correctly into the final position of each glass lite.

"In many ways, the installation of the glass canopy was actually one of the most straightforward parts of the project because we already had the data we needed to get it right," says Stutzki. From their Abaqus FEA test correlations, the team knew exactly what loads were allowable, and even desirable, to properly balance the finished canopy. As each glass lite was connected to the points and then the underlying steel supports, the installers used gauges to measure how much the associated Belleville spring was being compressed. They could then calculate the allowable force on the lite and manually adjust each spring accordingly.

"Every point-supported glass project we take on is unique," says Stutzki. "We've now developed our knowledge of both materials and technology to a level where we can apply realistic simulation in a systematic way to rapidly arrive at the optimum design solution for every challenge. Abaqus FEA helps us visualize what you can't see whenever you are working with glass."

For More Information
www.stutzkiengineering.com

Baker Hughes Refines Expandable Tubular Technology with Abaqus and Isight



If we hadn't been using the software, the most effective cone geometry would have never been considered.

Jeff Wiliams
Project engineer, wellbore construction group, Baker Hughes

The unique characteristics of each oil well, gas field, or alternative energy project call for custom-tailored exploration products and solutions that grow out of close collaboration with customers and an intuitive, flexible approach to engineering. Fine-tuning the tried-and-true certainly works in many cases—but applying innovative technology and being open to new ideas is how service companies stay ahead of their competition.

Baker Hughes is one such game-leader. Formed by two companies founded more than 100 years ago, Baker Hughes has a long history of inventions that revolutionized the fledgling petroleum era. At dedicated innovation centers, scientists conduct applied research; at regional technology centers, they collaborate closely with customers; and at product development centers, engineers work on next-generation products and services for drilling and evaluation, completions and production, and fluids and chemicals.

Given Baker Hughes' philosophy of ongoing discovery, it's no surprise that design simulation with finite element analysis (FEA) technology has been a key strategic product development tool. Yet early use of the software was not very proactive, according to Jeff Williams, project engineer for the wellbore construction group (part of the company's Completion and Production division). "Our group's original mentality was to use FEA in a reactionary role. If something breaks, let's go analyze it and see why. But I wanted to take the bull by the horns and use FEA on the conceptual forefront in our downhole expandable tubulars product development process," Williams says.

"Expandables" are a valuable product line in which Baker Hughes has been a leading developer over the last 15 years, with such concepts as the liner hanger packer, screen products, and monobore liners.

"Real-world testing and evaluation of concepts is more expensive in this expandables product line than any other because we are forming metal with materials that aren't just off the shelf," Williams says. "The potential time savings of using FEA for virtual design and testing to prove out our best concept models before prototyping was considerable. With tighter budgets these days, putting real-world testing further along in the product development process also saves money."

Williams has evaluated available FEA software and decided that Abaqus from SIMULIA, the Dassault Systèmes brand for realistic simulation, was the best tool for the expandable tubular challenge. "I knew what our simulation guys were already using, but wanted Abaqus," he says. "With the expansion process, there's obviously a lot of physics involved. There's conservation of volume, a bend/rebend phenomena, and the mechanical expansion of the pipe with the cone device. There's also hoop stress and the Bauschinger effect (post expansion, the tensile yield is stronger, but the compression yield strength is lower). There's so much going on at once. Abaqus is a clear market leader with these kinds of



Segmented expansion cone.

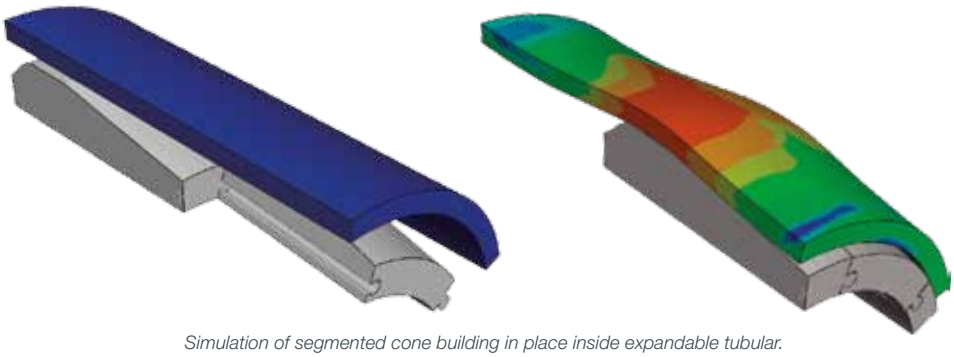

Simulation of segmented cone building in place inside expandable tubular.



Figure 1. Reinforced anchor slip.



Figure 2. FEA of extrudable ball seat.

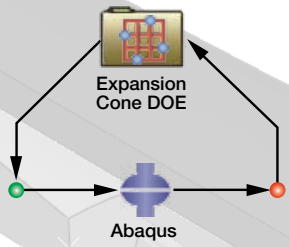

Figure 3. Isight simulation process flow for expansion cone design of experiments (DOE).

nonlinear dynamic events, not to mention the elastomers on which many of our products are based."

An early design problem was a case where an expandable anchor slip was potentially under too much deflection under an emergency release mode thus rendering the running tools (which are used to expand the tubular) irretrievable (Figure 1). The group ran multiple FEA models to determine where to reinforce the slips to avoid this problem.

Another case involved developing an extrudable ball seat that released pump-down balls at precise pressures to activate and deactivate service tools, but also allowed for up to five different balls to pass through without fracturing (Figure 2). FEA was used to help find the best design that would extrude the balls at predetermined pressures.

"For evaluating expandable openhole barrier concepts, Abaqus was crucial," Williams says. Concepts could be quickly simulated and filtered for feasibility, enabling informed decisions about whether or not to fund further development. "The idea that you don't do any real-world testing until you see FEA results has now definitely caught on throughout the company."

Isight: a quantum leap

Then came a further paradigm shift: the engineers were introduced to SIMULIA's Isight process automation and design optimization software, which could be used in conjunction with their Abaqus tools to speed up the design process even further (Figure 3). Isight automatically and systematically alters the variables in a design undergoing FEA. The user's choice of design of experiments (DOE), or other Six Sigma methodology, is linked to the FEA analysis to evaluate simulation results against criteria such as how much each iteration varies from the target, which model provides the best performance, and which design will cost the least to manufacture.

"My mind began racing," Williams says. "I could definitely see multiple applications for the Isight tool immediately. We had been accomplishing a lot manually with FEA, squeezing in as many runs as we could and banging out a lot of iterations over four to six weeks on a typical project. But I saw the potential for a quantum leap in time and money savings with Isight."

Williams' team had just started a pilot project for designing a cone expansion tool to be used with high-torque, gas-tight threaded connections in expandable tubulars. The specialty tubulars are part of a potential wellbore concept that involves one-trip drilling with casing, in which expandable liner packers come along for the ride as part of the bottomhole assembly. The new cone technology needed to work with Baker Hughes' already fine-tuned threaded connector designs and advanced materials. "The only thing we hadn't looked into optimizing yet was the cone," Williams says.

Existing cone geometry, developed five years earlier, had been "manually optimized" through repeated, extensive FEA testing for one type of threaded connector (connection A). But when the same cone design was tried on a different connector (connection B), it did not perform as well, so the design was abandoned and a new one was manually reworked through several more months of analysis. This new cone (BR-6) worked very well on connection B, but not with connection A. The engineers were faced with a quandary: developing a whole new cone geometry for each type of connection would be prohibitively expensive. Could they find one cone design that would work for both?

"Using the Abaqus component in Isight, we could communicate seamlessly with our FEA model behind the scenes," Williams says. "The drag-and-drop function in Isight is easy to use when setting up your simulation process flow. We could create a DOE as needed, picking the cone component dimensions we wanted to change by focusing on those parameters that we knew influenced the post-expanded geometry of the connection." The process did not call for major compute power, as they performed all their Isight runs on a 4-core, Xeon Intel processor running Windows XP.

With all the necessary analyses plugged into the Isight workflow, the team could then automatically run hundreds of FEA-tuned iterations to optimize the cone design. Before Isight, it would have taken at least two months of analysis and testing to develop a single acceptable cone geometry. With Isight, the development period was reduced to two days. "We saw awesome results, with clearly better thread expansion, almost immediately," Williams says.

Surprisingly the final result, deemed the OPTI-Cone, employed some of the old geometry used for connection A that had been discarded in the pursuit of the supposedly ideal BR-6 cone. "The OPTI-Cone uses geometry previously deemed unacceptable," Williams says. "Isight took us down a path we had not foreseen and gave us the confidence to keep an open mind about design. If we hadn't been using the software, the most effective cone geometry would have never been considered."

Subsequent iterations proved out the same size OPTI-Cone for several other thread configurations. And even when mapping over to different diameter expandables that required an alternative cone size, the engineers found that running their new DOE through Isight helped them arrive at the best geometry much faster. "Going forward, this kind of quick adjustment to specific product configurations gives the potential for more rapid, precise customization," he says. "With the OPTI-Cone, we can now attack a market that no one has been able to until now: high-torque, gas-tight expanded connections."

Automating the optimization process with Isight has another, more immediate benefit, Williams points out. "The time we are now able to save is hard to put a monetary value to. It's not just how much quicker the project can go, it's also a matter of, if I can get this done quicker, what else am I going to be able to work on next? We now have both the software tools and more available man hours to pursue new markets previously thought unobtainable."

For More Information
www.bakerhughes.com
www.simulia.com/cust_ref

Abaqus 6.10-EF Delivers HPC-ready Capabilities for Finite Element Analysis and Multiphysics Simulation

The Abaqus 6.10-EF release delivers a number of powerful, customer-requested enhancements for modeling, visualization, contact, mechanics and performance.

Among the modeling and visualization enhancements in 6.10-EF is dramatically improved support for substructure modeling capabilities. Abaqus users can now more easily create a substructure of a distinct region in their product, import it into an assembly, recover the results during an analysis, and reuse the substructures in future models, saving significant modeling time.

"The rearview mirror systems we supply to the medium- and heavy-duty truck manufacturers contain a number common internal sub-assemblies, such as actuators, that are used in many different mirror systems," stated Dr. Rolf de Swardt, chief engineer and FEA specialist at Lang Mekra North America. "The new substructure support capability in Abaqus 6.10-EF allows us to develop very detailed FE models of these components, and then 'plug' them into new system models, not only saving us time in constructing the models, but also shortening runtime of the large eigenvalue analyses we typically perform to ensure the mirrors do not vibrate excessively."

This latest Abaqus release also provides new contact and mechanics capabilities that improve the efficiency and accuracy of simulating real-world performance of designs, including fluid leakage between 3D bodies in contact. For example, uneven pressure applied to a syringe plunger during use can result in fluid leakage between the rubber seal and barrel. Support for 3D pressure penetration loading can now be used with any contact formulation, allowing for higher-fidelity simulation results.

Abaqus 6.10-EF provides significant performance enhancements, including a new scalable, parallel execution capability within the AMS eigensolver, which significantly accelerates frequency extraction analyses required to study Noise, Vibration, and Harshness (NVH) behavior in vehicles.



Abaqus 6.10-EF dramatically improves support for substructure modeling capabilities. This model illustrates an automotive engine mechanism model with the conrods modeled as substructures for improved computational efficiency.

Key Features of the Abaqus 6.10-EF Release:

Contact & Mechanics

- Improved technique for simulating fluid leakage between 3D bodies in contact
- Enhancements to XFEM allow users to predict crack growth due to low cycle fatigue
- Contact stress output is more accurate for second-order surfaces
- Support for creating tapered beam geometry in a model and ability to import tapered general beam sections from third-party applications
- More efficient and robust edge-to-edge contact performance in analyses that include extensive edge-to-edge contact interactions

Modeling & Visualization

- New interfaces for utilizing substructures, including substructure generation, usage, and recovery
- Part mirroring feature option enables mirroring about any planar face or datum plane
- CAD-associative interfaces supports SolidWorks 2011 and Pro/Engineer Wildfire 5
- Semi-automatic mid-surfacing enhancements with improved heuristics in the extend and blend tools and improved usability
- Improved accuracy of boundary meshes and more gradual surface mesh transitions (tet-meshing)
- New assignment tool for mesh stack orientation
- Additional tools to facilitate the process of building material models from test data
- New interface for setting up 3D pressure penetration
- Additional options for CFD & FSI pre-processing and streamline visualization for velocity or vorticity of fluid flow
- Nodal force symbol plot option
- New data for improved display and performance of constraints visualizations

Performance

- Reduction in ODB file size with output-only reporting on exterior nodes/elements
- New scalable thread-parallel execution capability of the AMS eigensolver
- Abaqus/Aqua can now apply wave drag and buoyancy loading to structures modeled using pipe and beam elements
- Improved stable time increment calculations resulting in performance gains
- Distributions that allow the efficient modeling of composites with non-uniform thickness
- New RNG k–ε turbulence model, which accounts for the effects of small scales of motion
- Improved stability of the FSI coupling algorithm

For More Information
www.simulia.com/products/abaqus_fea

New Release for Isight and SIMULIA Execution Engine

Enhanced open integration architecture further enables partners and customers to develop customized Isight components

In the latest release, both Isight 5.0, for simulation process automation and design optimization, and the SIMULIA Execution Engine (SEE) 5.0, for distributing Isight simulation process flows across compute resources, continue to deliver exciting market-leading solutions to all industries.

The new Eclipse plug-in within Isight 5.0 provides an intuitive user interface and common-component project templates, which allow customers and partners to create customized Isight application components in just a few days. This functionality is highlighted in the Alliances section on page 19.

When deploying the Abaqus component in Isight, the quality of the Abaqus model can have a significant impact on the success of the Isight study. We have seen some instances of Abaqus models that show unrealistically large variations of qualities such as maximum von Mises stress with small geometric variations. Isight 5.0 now includes a Noise Analysis component that identifies which input parameters cause unacceptable output parameter noise. These problems are often mitigated by switching to C3D10 elements or using expert C3D8 hex meshing.

Efficiency is also very important when conducting DOE design studies, because most nonlinear simulations take many hours to run. In Isight 5.0, we included the fractional factorial method which reduces the number of experiments of a full-factorial design. This is critical, considering that even with just five design variables, the user would need 35 (equaling 243) simulations to analyze all quadratic nonlinear effects using a full factorial design. By using the sparsity-of-effects principle, the fractional factorial method allows the user only a fraction of these simulations, for instance ¼, while still capturing the most important effects. We also added the Box-Behnken method, which eliminates the need for extreme corner point experiments that often lead to (useless) failed analyses.

Once a design study is defined, Isight helps you to deploy your hardware resources as effectively as possible so you can minimize your turnaround time. In addition to Platform LSF (Load Sharing Facility) support, Isight 5.0 comes with support for PBS/Pro, OpenPBS and Torque grid software.

For expensive simulations, design studies are facilitated through the creation of approximation models that interpolate and extrapolate the computed DOE sample points. Because approximations reduce the time for a function evaluation from hours to milliseconds, users can trade off performance characteristics in real-time, or do expensive Six Sigma optimizations in less than an hour. Isight 5.0 adds the elliptical basis function approximation. This technique is typically more robust than Kriging while offering comparable accuracy. The accuracy of any Isight approximation can be determined by reviewing its cross-validation error analysis results, and can typically be improved by increasing the sampling density for the best DOE sampling technique. The above figure shows little influence of sampling technique type on the EBF approximated Branin function, but a lot of influence for the Michalewicz function.

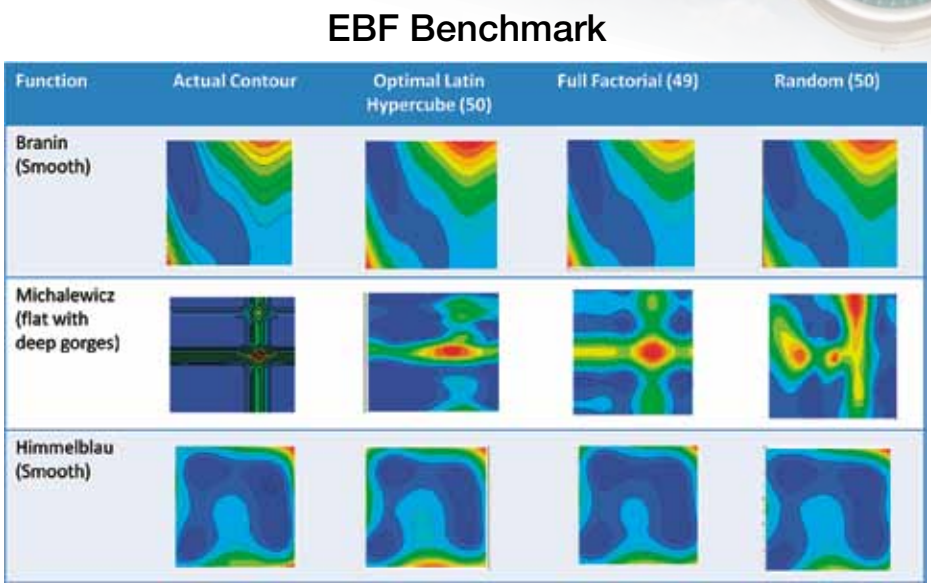

Figure 1. Effect of the influence of sampling technique on the accuracy of the EBF approximation.

Key Features of Isight 5.0:

Application Integration

- Support for the Eclipse open-source development environment, featuring an intuitive user interface and common component project templates
- NoiseAnalysis component assessing the quality of simulation models and their suitability for use with Isight
- Support for PBS/Pro (commercial version), OpenPBS, and Torque (open-source/free version)
- MATLAB component at no extra charge for all regions

Design Exploration

- Additional support for Design of Experiments (DOE) methods, including the Fractional-Factorial and the Box-Behnken methods
- Taguchi method component is now part of the PRO pack
- Elliptical basis functions for improved accuracy over radial basis functions
- Trend lines for 2D scatter plots

Key Features of SEE 5.0:

- Sim-flow license queuing
- Access control data import/export
- Scriptable command line access control

For More Information
www.simulia.com/products/isight

Catching the Wind with CAE

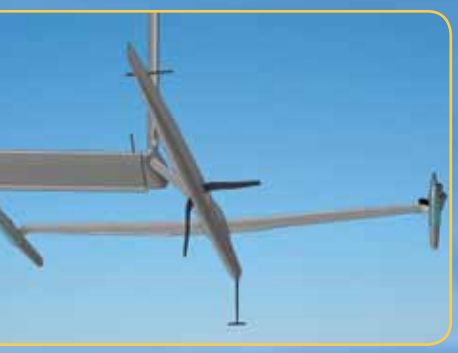

The two wing-sails and keels are rigidly connected through the hull center section. The pilot retracts a fairing which covers this section, allowing the wing-sails and keels to rotate through 90 degrees as the boat tacks.

Figure 1



Abaqus enabled us to quickly and efficiently visualize the effects of taking different approaches.

Tim Clarke
Founder and Engineering Lead at Verney Yachts

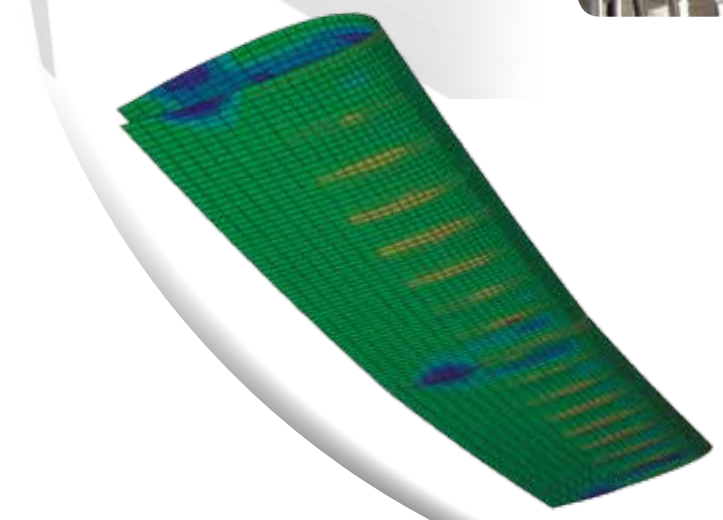

Verney Yachts uses Abaqus FEA to develop a sailboat without physical prototypes in pursuit of the world sailing speed record

Going fast—really fast—has always captured the imagination of engineers and inventors. In the sailing world, the speed record was most recently set in September of 2009 by the hydrofoil-design trimaran, *l'Hydroptère**. Prior record-holders included kite- and wind-surfers, and a proa and catamaran (*Crossbow I & II*). When the official 500-meter record was first documented by the World Sailing Speed Record Council in 1972, the speed was 26.30 knots (48.7 km/hr). The latest mark has almost doubled that pace at 51.36 knots (95.11 km/hr).

Tim Clarke, engineering team leader at Prospect Flow Solutions, Aberdeen, Scotland, was bitten by the speed-sailing bug when he first read about the *l'Hydroptère* team's record-setting preparations. Fascinated by both sailboats and aircraft as a child, Clarke spotted what he considered drawbacks with their approach and thought he could do better. Working evenings and weekends, he founded Verney Yachts in January 2009 and chipped away at a concept that breaks a host of sailboat design conventions.

Clarke's idea was to create a single-hull and equip it with two wing-sails—structures that, as their name implies, are a cross between a wing and a sail. The wing-sails in his design are rigid, not soft, manufactured from composite materials, and able to switch both position and function as the boat tacks, becoming either a wing if horizontal to the water or a sail if vertical (Figure 1).

With this new-concept boat, the *v-44 Albatross*, on the drawing board, the Verney team set their speed sights on 65 knots (120 km/hr) or greater—20 percent faster than the current record—without knowing whether the craft was feasible to build and without the opportunity to even construct a prototype.

To help translate the conceptual design into a physical reality, the team turned to Abaqus FEA from SIMULIA, the Dassault Systèmes brand for realistic simulation. The software enables them to test the boat's performance virtually, using a 3D-computer model to analyze the structural strength of components, their response to wind loads, and the craft's fluid and aerodynamic characteristics. The software also allows them to isolate, evaluate, and optimize structures critical to performance, such as the innovative wing-sails.

How a wing-sail works

Wing-sails are not new. The BMW *Oracle*, a trimaran sailboat, crushed its America's Cup competitor in February 2010 using a wing-sail. The *Greenbird*, a wing-sail equipped land-yacht, clocked 202.9 km/hr (126.4 mph) in March 2009, setting the wind-powered land speed record.

While a conventional aircraft wing needs a tail to provide stability, a wing-sail can achieve stability in other ways: In the BMW *Oracle*, it comes from a motorized trailing flap on a two-part structure (outside the rules for the speed-sailing record); and with the *Greenbird*, it's provided by leading-edge counterweights, as well as from the addition of a tail. But the *v-44 Albatross*' stability comes from the wing-sail itself.

On the *v-44 Albatross*, each of the 13-meter-long wing-sails is comprised of two sections: an inner plank (the half of the wing closest to the hull) and an outer plank (Figure 2). Named for the "flying plank," or "flying wing," technology (like the stealth bomber), the airfoil shape is designed to be inherently stable. Stability also comes from the use of counterweights, one for each plank (much like on the *Greenbird*), but not from a tail. "If we were to use a tail for stability, we would need one for each of the four planks," says Clarke. "That would add too much weight."

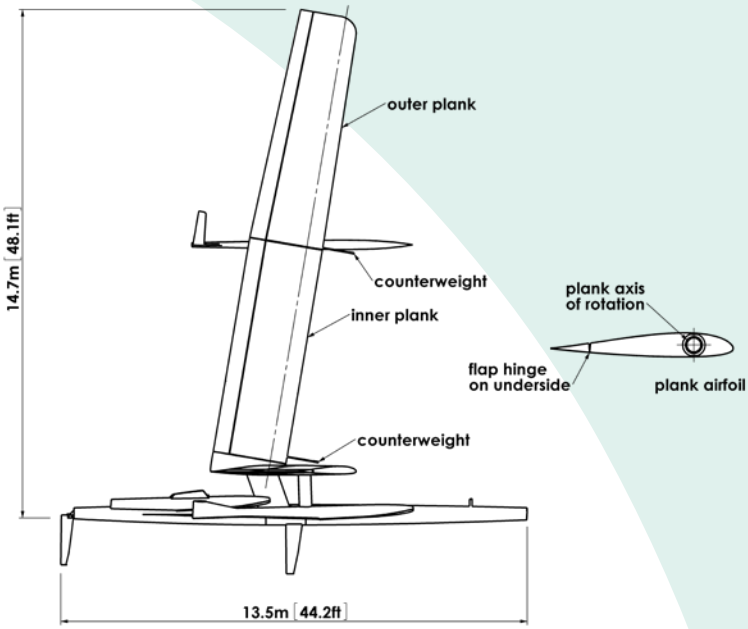

Figure 2. A diagrammatic view of the v-44 Albatross illustrating the structure of the wing-sails.

More specifically, each of the *v-44 Albatross*' planks are aerodynamically- and mass-balanced about their axes of rotation, and each are designed to weathercock, or find their own position in the airflow like a weathervane. The design of each plank is intended to mimic the behavior of a tubular spar centered at the axis of rotation, which has no tendency to rotate under bending loads. If the wing-sail did rotate as it experienced bending loads, it would upset the boat's aerodynamic balance. For this reason, a different structural approach needed to be taken when compared to a typical aircraft wing or wing sail. Because the wing-sail design is unproven in the field, the role of FEA for virtual design analysis is critical to the success of the project.

Modeling the wing-sail

When moving from conceptual to preliminary design, Clarke and his team needed to consider many wing-sail design variables. "Abaqus enabled us to quickly and efficiently visualize the effects of taking different approaches," says Clarke. Early in the design cycle, the team created some of the key models within Abaqus first and used the extensive functionality within the software's interaction module to simplify those models (emphasizing major members and minimizing components). The team also used SolidWorks Premium for additional 3D modeling and product data management.

Because the wing-sail's structure and function are so complex, the engineering team split the analysis into three stages: the spar, the ribs and secondary structures, and the skin. At each stage, as they built up the structure and added complexity, they wanted to ensure that the wing-sail was acting like a tubular spar with no orientation preference.

For the load case, they chose the worst-case scenario: the wing-sail operating in the horizontal plane and the boat at high speed with minimum keel penetration in the water. This situation generates lift across the entire wing-sail as well as the greatest bending loads. To run the simulations, they used a 64-bit Windows workstation with 32 GB RAM.

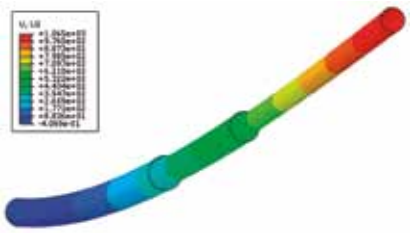

Figure 3. Analysis results of deflection for the carbon-fiber composite main spar.



Figure 4. Traction loads applied directly to the main spar of the v-44 Albatross wing-sail.

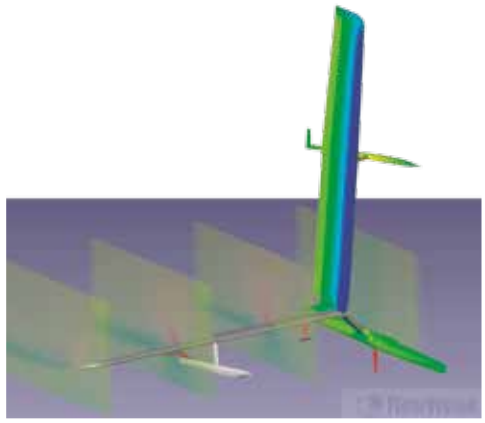

Figure 5. CFD analysis shows the predicted velocity vectors and pressure distribution at 40 knots boat speed.

How the conceptual wing-sail performed

The Verney team first analyzed the wing-sail's composite main spar (consisting of three tubular, nested sections connected by bearings), which runs like a spine inside the entire length of the structure's leading edge. After applying surface-traction loads, results indicated that maximum deflection at the tip was only about one meter, or 7.7 percent of the total 13-meter spar length (Figure 3). The maximum stress resulted in a reserve factor (a measure of strength) of 1.5 for compression and 2.9 for tension.

For the next analysis, the engineering group added the secondary structure, a series of carbon-fiber-covered foam ribs (each in the shape of the wing's cross-section), as well as the wing's leading- and trailing-edge, composite spars (Figure 4). These structures form the shape of each wing plank and allow aerodynamic loads to feed into the main spar. (This secondary structure is partially de-coupled from the main spar in a way that ensures it does not increase the stiffness of the overall structure.) Simulations illustrated that deflections perpendicular to the direction of the applied load are small, ranging from 0.5 to 1.4 percent.

Clarke and his team examined the full assembly in the third analysis, adding the Mylar/foam skin to the wing, as well as structural foam to the trailing edge and wire bracing between the ribs. The foam edges were represented using solid elements, the wire bracing using rigid beams, and the Mylar/foam with a single layer of thick conventional shell elements for the composite layup. Tension was applied to the skins by 'freezing' them within a thermal step. The simulation showed deflections perpendicular to the applied load ranging from 0.4 to 1.7 percent. Using this full-assembly model, the team calculated the skin deflection as well as absolute maximum stress within the secondary structure.

The three analyses validated the wing-sail concept, at the same time pointing out several design issues: the mass as modeled was heavier than in the conceptual design (progress with the boat layout and control system has since increased the wing-sail mass budget by 20 percent and increased the main spar diameter by 12 percent); the reserve factor for the main spar compression came in at 1.5, lower than the targeted 2.0 (future optimizations will lead to better composite layups and a reduction in stresses); and the overall deflection was under 10 percent (and can be compensated by adjusting the unloaded position of the two wing-sails on the hull, separating them by more than 90 degrees).

The Verney team is now engaged in extensive computational fluid dynamics (CFD) analyses of the aero- and hydro-dynamics of the boat using FlowVision HPC from Capvidia (a SIMULIA partner). For the above-surface aerodynamics, each fluid structure interaction (FSI) analysis couples Abaqus with the CFD software and involves capturing the movement of six independently rotating surfaces (four wing-sail planks and two outriggers) at different speeds across the boat's speed range (Figure 5). "This process helps us tune the control system and virtually test sail the boat before it is constructed," says Steve Howell, CFD lead. Analyses of the free-surface hydrodynamics will also be carried out and will examine design and performance of features such as the speed-critical keel.

When the design is finalized, the *v-44 Albatross* will be constructed without the benefit of prototypes or wind tunnel/tow-tank testing. Projects taking a similar, computational-only approach include Richard Noble's record-setting Bloodhound supersonic car, Richard Branson's Virgin Formula One Team, and the America's Cup winner BMW Oracle. "The cost of building physical prototypes is prohibitive for a project like ours," says Scott Tuddenham, project lead. "There's no margin of error. We have one chance to get it right."

With an eye on the speed-sailing record

To help the Verney team achieve its goal, Dassault Systèmes (DS) has chosen the *v-44 Albatross* project for its Passion for Innovation program. In keeping with the program's mission—to help individuals and organizations bring their innovative ideas to life—both DS organizations, SIMULIA and SolidWorks, are providing software, services, and support to assist in bringing the Verney team's dream to life.

The projected date for the speed-sailing record attempt is early 2013. The chosen site is the upcoming Summer Olympic's sailing venue in Portland Harbour in the UK. The Verney team hopes their boat will cover the official 500-meter distance in a scant 16 seconds or less. When it does, the *v-44 Albatross* will literally fly above the water, with only the keel breaking the surface.

Bringing a simulation-only design to life takes tremendous trust in the power of the engineering technology behind the design. "I used to think of FEA as a tool that produced a good prototype," says Clarke. "But now we're using the software to go straight from design to a finished product. It's a phenomenal age for engineering."

**The speed record now stands at 55.65 kts, set by a kite-board designed by Rob Douglas (USA).*

For More Information
www.verneyyachts.com

Partners Leverage Isight Component Development Tools

With the release of Isight 5.0, SIMULIA has made it much easier for partners and customers to create customized Isight applications through a new Eclipse™ plug-in. This plug-in provides access to the Eclipse open-source development environment by means of an intuitive user-interface and common-component project templates.

Ian Mercer, software director at Safe Technology commented, "Our team used the application programming interfaces and development resources available for the successful and rapid creation of a robust fe-safe component for Isight, significantly enhancing durability optimization. The Eclipse plug-in greatly simplified and accelerated our development efforts. We were able to develop a proof-of-concept component within two working days, and completed a working prototype within one week."

The SIMULIA Component Integration Program (CIP) was created in 2008 to enable companies to develop components for widespread distribution to the Isight community. SIMULIA is focused on aggressively developing and delivering



more development tools in future releases that will further simplify and accelerate the delivery of components. CIP partners can expect to enjoy and benefit from early access to these tools.

"With Isight's open architecture, we were able to rapidly implement a workflow component that our customers can use to integrate AVL BOOST, EXCITE and FIRE simulation tasks into their Isight workflows to optimize powertrain designs," says Dr. Jürgen Krasser, manager of software engineering in advanced simulation technologies at AVL.

Jean-Claude Ercolanelli, senior vice president of product management at CD-adapco, stated, "Through close collaboration with SIMULIA's development team, we developed a free STAR-CCM+ plug-in for users who want to perform Design of Experiment studies and optimization tasks using Isight."

In addition to expert technical support, CIP members also benefit from marketing support that includes the representation of partner components directly alongside SIMULIA's native components on SIMULIA Component Central at components.simulia.com.

Eclipse is a trademark of Eclipse Foundation, Inc.

For More Information
www.simulia.com/events/webinar_cip
simulia.alliances@3ds.com

SIMULIA Partner Day Invigorates a Growing Ecosystem

On November 16, 2010, thirty-six partner simulation companies from the Abaqus, Component Integration, and the V5 Software Community Programs gathered at SIMULIA headquarters for the SIMULIA Partner Summit. This marks the eighth anniversary of this annual event which has grown steadily since its inception. Over fifty partner attendees spent the day with us to hear our brand strategy, updates of key technologies and product roadmaps, and how to leverage our various alliance programs to deliver a breadth of value-added, integrated solutions to customers around all of our simulation products.

Frank Terlecki, Manager Software Products at Intel Corporation, attended the Partner Summit and stated that, "The Summit is an excellent forum to quickly and efficiently get a comprehensive view of the entire simulation community. Understanding the unique needs of a wide array of simulation development models gives Intel insight to better serve this marketplace."

The event also provides the partners with the opportunity to meet one-on-one



with key SIMULIA executives and senior managers who host the event and also network with other members of the partner ecosystem. Jerad Stack, CEO of Firehole Composites, noted, "recently released fe-safe/Composites from Safe Technology —a new, cutting-edge solution for Abaqus users for the prediction of fatigue failure of laminated composites—is a direct result of meeting and establishing a collaboration with Safe Technology at this event." To learn more about simulation ecosystem and our alliances programs, please visit our website.

For More Information
www.simulia.com/alliances/alliances
simulia.alliances@3ds.com

Virginia Tech Uses Finite Element Models to Predict Suspension Member Loads and Compliance in a Formula SAE Vehicle



A racing vehicle suspension system is an elastic structural linkage that defines many of the handling characteristics of the racecar while supporting it under complex loading scenarios. The Formula SAE team at Virginia Tech uses Abaqus to determine suspension member loads and compliance to design a safe and effective suspension system.

An Abaqus finite element model was developed for the right front suspension corner to determine member loads and suspension compliance. The finite element model was initially developed with beam elements, allowing axial, bending and torsional loads, and connector elements to represent kinematic degrees-of-freedom of the joints. Welded control-arm members on the upright, simplified pull-rod (PR) mounting brackets on the upper control arm (UCA) and the toe-rod (TR) were also represented. The pull-rod member actuates the spring damper through the bell crank to the wheel assembly, previously mounted on the upright. The front-corner model used several design load cases, revealing reduced axial loads and increased bending moments reducing the critical buckling load of the compressive members.

The Abaqus front-corner suspension model incorporates steering loads from the driver, input as prescribed displacements at the toe-rod (TR). The steering linkage displacement changes the upright orientation angles and wheel load directions applied to the suspension. Including steering inputs in the FE model results in significant changes in member loads for load cases involving slip-angle effects used to determine the effective steer angles during cornering. Quasi-static design loads are used to predict the vertical movement at the wheel center and associated member loads. The suspension designer uses these results to determine if changes to spring rate or anti-roll bar stiffness will result in a more desirable wheel movement for a given loading condition.

Determining which suspension components contribute most to camber and toe compliance in the suspension system requires a more refined finite element model. The purpose of the suspension compliance model was to match camber and toe stiffness goals and breakdown stiffness on a component level. A three-dimensional finite element model of the suspension linkage parts was developed from a full-car solid model, importing the front suspension corner parts into Abaqus. A discrete rigid tire model was used to avoid confounding the suspension compliance with the tire elastic response. Assembly constraints were used to locate the suspension parts, defining sets and contact surfaces in the part models. The model makes extensive use of partitioning and sets to parameterize part meshing using C3D10M elements.

Continued on page 21

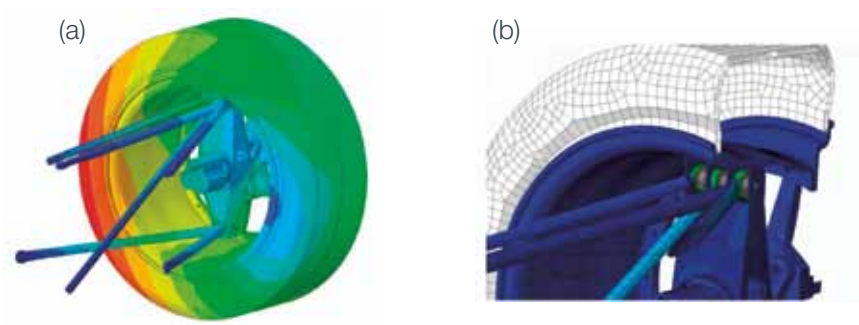

Figure 1. Right front corner compliance model, (a) displacement magnitude for the lateral load under acceleration load case, (b) von Mises stress in the rod-end connections.

Contact-pair modeling between joint components was as realistic as practical, using shear and frictional forces between contact pairs to mimic bearing and clamp loads. Driving condition load cases were applied at the tire contact patch with boundary conditions applied at the inboard suspension points on the chassis. Two load cases were studied for suspension compliance, the 5g bump and pure lateral load under acceleration cases. Figure 1 shows the displacement magnitude for the lateral load under acceleration load case and the stresses in the rod-end connections. The compliance at the wheel center was used to estimate the overall corner compliance. The displacements at the joints were queried to determine the load distribution and relative displacement in the rod-ends, including whether or not the joints reached the hard stops in the spherical bearing.

Virginia Tech FSAE uses Abaqus extensively for design, analysis and simulation for chassis, suspension and driveline subsystems. Previous modeling emphasis was associated with load transfer through contact modeling in assemblies and subsystems, suspension, chassis mounts, bell-crank design and integrated composite structure. The immediate future design and modeling efforts are to support dynamic load simulation and model correlation with vehicle system test. The Abaqus simulation environment allows Virginia Tech FSAE to evaluate integrated vehicle subsystem and systems design, in addition to component level analysis. Effective use of integrated multi-step simulation is key to making better design trade-offs and optimizing vehicle performance.

Lane Borg
Associate Engineer, Performance Test Driver
Goodyear Proving Grounds,
San Angelo, TX
Lane_Borg@goodyear.com

Johnson Miles
Associate Engineer Crane and Large Derrick
Product Development
Daleville, VA
Johnson.miles@altec.com

Bob West
Associate Professor
Mechanical Engineering Department
Virginia Tech
Blacksburg, VA
westrl@vt.edu

For More Information
www.vtmotorsports.com

Introducing the SIMULIA Online Learning Community



SIMULIA has always understood the importance of developing a strong presence in the academic community. Since the earliest releases of Abaqus, we have made our software available to researchers. Abaqus quickly became the simulation software package of choice because of its unique nonlinear capabilities and effectiveness solving difficult, real-world problems. This wide-spread adoption helped Abaqus technology stay on the cutting edge of many areas of academic scientific and engineering research.

Expanding the SIMULIA academic community helps to increase availability of talented engineers qualified to tackle tomorrow's challenges in realistic simulation. In support of this goal, we developed a formal academic program in 2003 with a team dedicated to promoting SIMULIA products to academic institutions in the United States and around the world. Since then, we have delivered the Abaqus Teaching Edition license for classroom use, the extremely popular Abaqus Student Edition—available for personal use at home, on campus, or in the office—and engaged in countless projects aimed at expanding our overall academic presence around the world.

As part of our ongoing commitment to engineering education and to developing strong ties between Academia and Industry, we would like to announce the availability of the online SIMULIA Learning Community. Our community platform is a brand new way for you to experience SIMULIA technology; a place where our user community can collaborate across industry and academic boundaries to share examples, tutorials and methods related to simulation and analysis.

In the community site you can:

- post and read blogs
- access tutorials, examples, and research papers
- ask and answer questions
- post job openings
- create your own network of similar-minded members to share ideas and activities

For example, you can access video tutorials outlining the complete process of creating and running a simulation in Abaqus/CAE. If you're curious about how Abaqus is used in the Aerospace industry, you can watch a presentation created for new aerospace engineering students at Old Dominion University. For those affiliated with an academic institution in North America and Europe, you will find a link that (with the approved credentials) will allow you to download a free copy of Abaqus 6.10 Student Edition.

While we are just getting started, we invite you to join our community to share your interests and leverage the wealth of knowledge and resources available in the SIMULIA users' ecosystem!

A user account must be created to join the learning community.

For More Information
swym.3ds com/#community:73

Tips & Tricks

SIMULIA DesignSight

How to simulate realistic product performance in the V6 environment using SIMULIA DesignSight.

The SIMULIA DesignSight family of products enables simulation-driven design. DesignSight provides guided methods for product simulation. The target user has strong product design knowledge but is only an occasional simulation user with minimal to moderate simulation experience.

A seamless extension of CATIA V6 product design, DesignSight has breakthrough ease of use, robustness, and enablement of design-analysis collaboration. It is focused on helping designers responsible for shape, size, and material selection to make decisions faster, based on knowing how their product will perform in a real-world environment. The ultimate goal of using DesignSight is to improve design decisions through simulation.



Loads: Define the load value according to the part's performance requirements, based on typical customer usage.



Results: The stresses appear by default. In red are the areas in the part that might fracture or wear out the most quickly.

TIP: HOW TO CHECK THE BEHAVIOR OF A PART IN REAL-LIFE USE

DesignSight is made for CATIA users as a tool to quickly validate a design under real life loading conditions to give confidence that the design will meet the requirements or show where the design would benefit from modifications. DesignSight can help designers converge to a mature and high-quality design early in the design process, cutting short what can be a long sequence of design-test iterations that are both expensive and time consuming.

HERE'S WHAT YOU DO:

1. Open a part in DesignSight
2. Select the appropriate analysis method as pictured in the screenshot
3. Select the stress method
4. Apply the appropriate material if not already defined
5. Apply the restraints – how the part is held and/or where it can rotate
6. Apply the load – what is pushing, pulling, and twisting the part
7. Run the simulation
8. Review the results:
   - A. Check the stress results to see the areas in the part most likely to break or wear out
   - B. Check the displacement results to see how much the part deforms
   - C. Check the plastic strain to see whether the part deforms permanently

For More Information

www.3ds.com/products/simulia/resource-center/videodemo-gallery/

2011 SIMULIA Customer Conference

Barcelona, Spain | May 16–19, 2011

For nearly two decades, the SIMULIA Customer Conference (SCC) has provided a valuable forum for discovering and understanding how experts in engineering and academia are applying the latest simulation technology and methods to accelerate and improve product development.

Join your industry colleagues in beautiful Barcelona to participate in a valuable exchange of industry knowledge and networking.







Highlights Include:

- 90+ Customer Presentations
- Networking with Industry Peers and SIMULIA Experts
- Complementary Solutions
- 4 Advanced Seminar Options
- Special Interest Groups
- Conference Proceedings

Visit our website for details!

www.simulia.com/SCC2011

Premier Sponsors

CD-adapco Microsoft

Lunch & Exhibitor Sponsor

HBM

Exhibitor Sponsors

ANYBODY TECHNOLOGY, BETA CAE Systems SA ANSA µETA, capvidia, Cenaero, Moldex3D, DatapointLabs, eStream Engineering, Fraunhofer SCAI, GRANTA, intel, JMAG, LMS, NVIDIA, nw NUMERICS, Platform, safe technology, sgi, simpleware, ZENTECH



Explore, Discover, Improve...

In today's competitive business environment, improving product efficiency, safety, and reliability—while reducing time and costs—are mission critical goals. Our customers are achieving these goals by leveraging Isight for simulation automation and design optimization.

Isight enables the integration of CAD, CAE, test data, and other applications into consistent and repeatable simulation process flows. By automating simulation execution, Isight enables you to use powerful design of experiments and optimization tools to quickly—and affordably—explore and improve product performance.

Download Customer Papers on Isight at
www.simula.com/cust_ref

SIMULIA