INSIGHTS

8
6 2009
Dassault Systèmes Realistic Simulation Magazine



ILC Dover **Simulates** Lunar Habitats



Scripps
Analyzing Knee Replacement

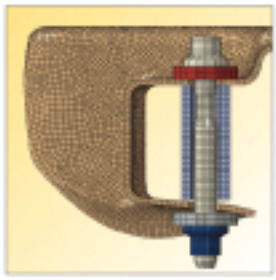

Bolt Studio
Streamlining Bolt Definition



Grupo TAM
Optimizing Composite Structures

SIMULIA

INSIGHTS

September/October 2009

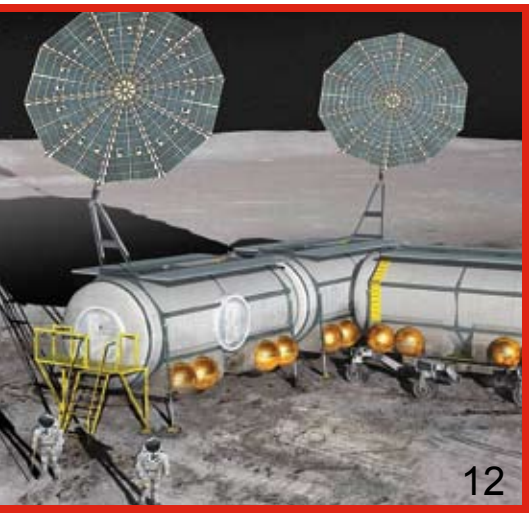



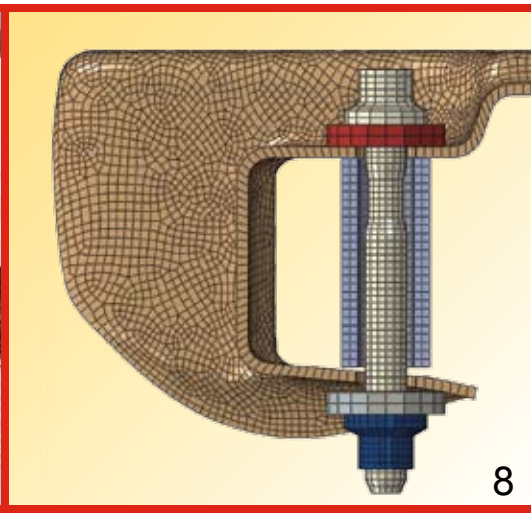

Inside This Issue

12 Cover Story
ILC Dover Simulates Lunar Habitats
On the cover: Ric Timmers (left), Dave Cadogan (middle), Cliff Willey (right)

10 Customer Spotlight
Scripps Studies Nature's Shock Absorbers

8 Product Update
Bolt Studio Plug-in for Abaqus/CAE

In Each Issue

3 Executive Message
Ken Short, VP Strategy & Marketing, SIMULIA

4 In The News
- Dana Holding Corp.
- Northwestern University
- NYC Department of Transportation
- SAMPE Award

6 Customer Spotlight
EADS Pushes the Composite Envelope

9 Product Update/Training
- Abaqus 6.9 Student Edition
- What's New in SIMULIA Training

14 Aerospace Strategy Overview
Kyle Indermuehle,
Aerospace Industry Lead, SIMULIA

16 Customer Case Study
Grupo TAM Optimizes Composite Structures

19 Alliances
- NASA Optimizes Preliminary Design of Ares V Launch Vehicle with HyperSizer for Abaqus
- Extending Abaqus Composites Capabilities Through Partner Applications

20 Academics
- Nanjing University Simulates Bird Impact on an Aircraft Windshield
- Lakehead University Team Uses Abaqus in Bridge Competition

22 Customer Viewpoint
Ken Perry, President, ECHOBIO LLC

23 Events
- SCC 2010 Call for Papers
- 2009 Regional Users' Meetings Schedule

INSIGHTS is published by
Dassault Systèmes Simulia Corp.
Rising Sun Mills
166 Valley Street
Providence, RI 02909-2499
Tel. +1 401 276 4400
Fax. +1 401 276 4408
simulia.info@3ds.com

www.simulia.com

Editor:
Tim Webb

Associate Editors:
Karen Curtis
Julie Ring

Contributors:
Abel Pardo (Grupo TAM), Cliff Willey (ILC Dover), Cong Wang (GM), Darryl D'Lima (Scripps Clinic), Dave Cadogan (ILC Dover), Erin Kilmer, Ivonne Collier (Collier Research Corporation), Jan Demone, Jon Dunn, Jose Carlos Fernandez (Grupo TAM), Ken Perry (ECHOBIO LLC), Ken Short, Kyle Indermuehle, Mark Bohm, Mark Monaghan, Mingbo Tong (Nanjing University), Parker Group, Ric Timmers (ILC Dover), Shuhua Zhu (Nanjing University), Tamas Havar (EADS), Timo Tikka (Lakehead University), Wei Chen (Northwestern University), Yuequan Wang (Nanjing University)

Graphic Designer:
Todd Sabelli

The 3DS logo, SIMULIA, CATIA, 3DVIA, DELMIA, ENOVIA, SolidWorks, Abaqus, Isight, and Unified FEA are trademarks or registered trademarks of Dassault Systèmes or its subsidiaries in the US and/or other countries. Other company, product, and service names may be trademarks or service marks of their respective owners. Copyright Dassault Systèmes, 2009.



The Future—Today?

In recent years, I've noticed a significant increase in the diversity of industries represented by our customers and of the applications for which Abaqus is used. This is good news from a SIMULIA business perspective, as all companies today are striving toward a more diverse market position in order to insulate themselves from over-dependency on one or two industry segments. But this growth in diverse industries is also valuable to review from historical and predictive perspectives.

One of the guiding principles of our product strategy is Unified FEA. This principle is easy to understand on the surface: replace multiple FEA software tools with a single, robust, and scalable solution—Abaqus. A major driver for customer adoption of Unified FEA is the cost savings from rationalization of software licenses. However, there are also many other less-easily measured savings which come from reduced training costs, eliminating data translation, increasing accuracy, and improving resource flexibility and collaboration.

Unified FEA has generally been accepted as a "good idea" by our customers in traditionally simulation-focused industries such as automotive and aerospace, but these leading customers have been a bit slow to embrace and implement the required changes. Perhaps their slow adoption has been caused by concerns over the perceived initial transition costs or limited by the inertia of their traditional processes and culture.

With significant savings and efficiencies to be gained, why are the automotive and aerospace industries entrenched in a non-unified FEA approach? I think part of this situation has been caused by the growing pains of the CAE industry itself. The immaturity of the early commercial FEA offerings left simulation pioneers little choice but to choose software based on complex trade-offs between required accuracy, software capability, computer performance, and user skill. This situation often resulted in the adoption of a purely linear analysis approach with significant extrapolation to achieve acceptable results.

Over time, nonlinear analysis became more accessible as software improved and computer power grew. The automotive and aerospace companies then added these new packages, including Abaqus, to simulate specific physical phenomena without evaluating or changing their existing processes and methods. Today, it is not unusual for companies to be using multiple commercial FEA applications: one for linear statics and dynamics, Abaqus for some nonlinear applications, and yet other packages for specialized simulation applications, although Abaqus is often capable of solving all of the problems.

In other industries, the picture is quite different. Many of our customers in the life sciences, consumer goods, and energy segments have never managed their simulation processes and workflows in anything other than a Unified FEA environment—with Abaqus as the core solution technology. These customers were fortunate enough to quantify the value of a Unified FEA process in their development programs without being hindered by legacy linear approaches.

So are the customers in these "emerging" industries an indicator of the future? We think so. In today's world, the idea of different users, or teams, simulating a variety of physical behaviors with disconnected tools and methods is difficult for any company to justify. Collaboration, flexibility, and efficiency are critical to gaining competitive advantage—particularly in the current economic situation. In order to emerge from the downturn with positive momentum, all product development organizations—including automotive and aerospace companies—should take a hard look at their current FEA tools, methods, and processes and make the bold decisions necessary to transform, unify, and adapt for the future.

Over the years, SIMULIA has invested a great deal in R&D and technology development to address the multiple attributes and diverse physical behavior demanded by a Unified FEA environment. We are available to work closely with you to assess your processes, identify cost savings, provide guidance on best practices, and implement transition services that will help your company move beyond legacy-driven tools and methods toward a unified simulation approach. The upcoming Regional Users' Meetings are a great opportunity for you to speak to our regional managers to determine what benefits you can gain from a Unified FEA approach. We look forward to creating the future with you—today.



Ken Short
Vice President,
Strategy & Marketing,
SIMULIA

Dana Selects Simulation Lifecycle Management



Dana Holding Corporation has selected SIMULIA SLM as its simulation lifecycle management solution to enhance product development decision-making processes and support key business objectives.

Dana will use SIMULIA SLM software to capture and better leverage product-performance knowledge and engineering expertise created during the design simulation process. Working with SIMULIA, Dana will also help define future technology requirements for the effective management of simulation applications, data, and methods as they relate to the automotive industry.

"Product development is becoming more complex. It involves not just system simulation requirements, but also the need to manage and share huge amounts of engineering information that is housed throughout the world," stated Frank Popielas, manager of Advanced Engineering for Dana's Sealing Products Group. "SIMULIA SLM will provide us with consistency, accuracy, and faster turnaround time through easier, coordinated information access. Not only is SIMULIA a proven leader in the CAE market, they have a deep understanding of our engineering processes and workflows and share our vision for leveraging simulation knowledge as a valuable business asset."

SIMULIA SLM is based on Dassault Systèmes' V6 platform. It enables the capture of simulation expertise for deployment in standard and repeatable processes. SIMULIA SLM improves the efficiency and effectiveness of simulation through the entire product lifecycle.

>> www.dana.com

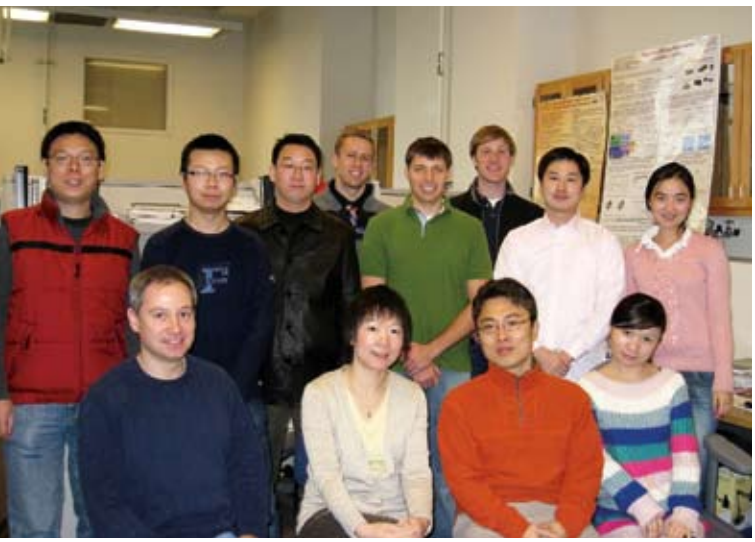

Front row: Chris Hoyle, Wei Chen, Sanghoon Lee, Fenfen Xiong.
Back row: Shikui Chen, Yu Liu, Yuliang Li, Steve Greene, Paul Adrent, Mark Drayer, Xiaolei Yin, Lin He.

Northwestern University Using Isight in Teaching Computational Design

Northwestern University is using Isight to teach and implement computational methods in product and process design.

The courses using Isight, which are led by Dr. Wei Chen of Northwestern's Department of Mechanical Engineering, target both senior undergraduate and entry-level graduate students across all engineering disciplines and in the Segal Design Institute. The curriculum includes lab sessions and learning modules for teaching advanced computational design techniques such as modeling and simulation, optimization, design of experiments, metamodeling, and robust/reliability-based design.

Adoption of Isight has allowed Northwestern to establish a repository of computational design examples and industry-sponsored design projects, including topics such as composite structure optimization, engine piston design, and steel material design. Working on industrial projects has provided students with the skills to solve real-world engineering problems using the computational design methods and software proficiency gained in class.

"Based upon our experience, we strongly recommend the adoption of Isight for teaching computational design methods in the design curriculum of any engineering program," stated Dr. Chen. "Isight enables focus upon computational design concepts, as opposed to letting the computational logistics of programming optimization algorithms overwhelm students new to computational design."

>> http://ideal.mech.northwestern.edu

Seismic Analysis of the Brooklyn Bridge



New York City's Department of Transportation (DOT) is in the process of evaluating and, if necessary, rehabilitating its many important bridges to meet seismic guidelines. A comprehensive seismic evaluation of the Brooklyn Bridge was recently completed by the DOT, the New York City office of Parsons Corporation, and Northeastern University to assess its vulnerabilities and potential retrofit requirements. The scope included the Manhattan and Brooklyn masonry and steel approach structures as well as the approach ramps.

The Brooklyn Bridge is the oldest of the East River bridges in New York City. When completed in 1883, it was the world's only steel suspension bridge and had a center span 40 percent longer than any other bridge. Since that time, it has stood as one of the world's most revered engineering achievements and one of the world's most recognizable and nationally celebrated landmarks.

In a comprehensive two-part evaluation of the Brooklyn Bridge that used the latest modeling techniques, engineers determined that the bridge's foundations have the ability to withstand a 2,500-year event without any sliding or separation at their bases, obviating the need for retrofits that might alter the architectural form of the renowned crossing.

>> http://pubs.asce.org/magazines/CEMag/2009/Issue_02-09



Abaqus User Receives Outstanding Paper Award at SAMPE Conference

A paper by an Abaqus user was designated an "Outstanding Paper" at the Society for the Advancement of Material and Process Engineering (SAMPE®) Fall Technical Conference, which was held October 19-22 in Wichita, Kansas. "Improvements in FEA of Composite Overwrapped Pressure Vessels," authored by Rick P. Willardson of eServ, a Perot Systems Company, David Gray of SIMULIA, and Thomas K. DeLay of NASA – Marshall Space Flight Center, was selected out of 175 submissions.

Composite Overwrapped Pressure Vessels (COPVs) have been in use for decades, and are currently used in a variety of applications from solid rocket motor cases to paint-ball gun pressure reservoirs. The paper provides background on some of the issues involved with COPV design and analysis, and compares traditional COPV design and analysis with analysis done with the SIMULIA Wound Composite Modeler (WCM), an extension that allows Abaqus users to create models with detailed specification of structural geometry and winding layout parameters.

>> www.simulia.com/cust_ref

For More Information
www.simulia.com/news/press_releases

To share your case study, send an e-mail with a brief description of your application to simulia.info@3ds.com.

Designing a Greener, Cleaner Aircraft

EADS Pushes the Composite Envelope Using Abaqus FEA

In 2001 the Advisory Council for Aeronautics Research in Europe (ACARE) published a report that looked at air travel 20 years into the future. The report—European Aeronautics: A Vision for 2020—set goals that would decrease environmental impact of the aeronautics industry by cutting aircraft fuel consumption 50 percent, CO_2 emissions 50 percent, and NOx emissions 80 percent. In order to achieve these aggressive goals by the year 2020, the aircraft engineering community is engaged in a competitive race to design lighter aircraft with greater fuel efficiency and longer range. One of the key strategies for achieving these goals is the replacement of current metal components with innovative composite structures.

At EADS (European Aeronautic Defence and Space), a number of their business units and aerospace partners are actively engaged in the development of "greener, cleaner" commercial aircraft. Through a global network of Technical Capabilities Centers, collectively known as EADS Innovation Works, they are looking for ways to bring sustainability to aircraft design—one component at a time.

Sustainable Aircraft Design Takes Off

Dr. Tamas Havar, Specialist at EADS Innovation Worksite near Munich, Germany, leads a variety of projects in the Structure Integration & Mechanical Systems department. He and his team are tasked with developing new aircraft structures using composite materials. "The goal of our ongoing analysis program," Havar says, "is to reduce emissions and manufacturing costs by focusing on the development of innovative composite design and manufacturing methods."



As part of the Aviation Research Program "LuFo IV - HIT," spearheaded by Germany's Federal Ministry of Economics and Technology, the Airbus High-Lift R&T group led a project team of engineers from various EADS business units and university partners to analyze an advanced composite load introduction rib (LIR)—an important wing flap support structure in the Airbus A340 aircraft.

In aeronautic applications, pre-impregnated carbon fiber reinforced polymer (CFRP) composites are typically the composite of choice. In this instance, however, the EADS engineering team—while looking to reduce costs—chose an autoclave-free manufacturing process which led to the use of textile composites instead. Textile composites are also used in the bulkhead of the A380—Airbus' most composite-intensive aircraft to date.

A critical factor in the design of composite aeronautic structures is how the parts attach to the surrounding aircraft structure. Current composite high-lift structures—such as a flap—typically utilize metal load introduction structures to attach to the wing. These structures, with *fail-safe designs*, lead to heavier aircraft and higher manufacturing costs. There are also differences in thermal coefficients between the metal and composite parts that are connected. Composite load introduction structures, on the other hand, permit a *damage tolerance design*, since a failure of one ply is compensated by other plies that remain intact. The use of composite material also eliminates the problem of thermally induced loads, since both the high-lift and load introduction structures are made of the same composite materials.

Abaqus FEA Fuels Composite Structure Analysis

For design analysis of their composite LIR, the EADS Innovation Works team chose Abaqus FEA. "Abaqus is our preferred nonlinear solver," says Havar. "It has powerful composite analysis capabilities, especially for 3D elements such as in our LIR study." Abaqus FEA is used throughout the product design life cycle at EADS—in the concept phase, to narrow down the designs; in the pre-design phase, to design the preferred concept; and in the final or detailed design stage, to ensure that all specifications are met.

The new composite LIR included a drive rib with integrated lugs that allow for its

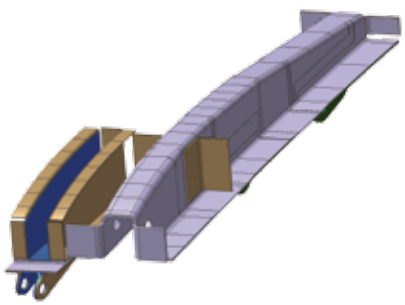

Figure 1. Design for composite load introduction rib (LIR, gray) with drive rib (left, tan and blue) and integrated lugs (below)

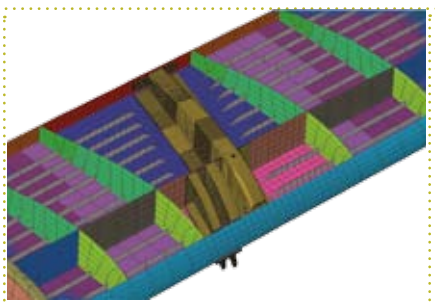

Figure 2. Model of load introduction rib (LIR) and surrounding flap and wing structure

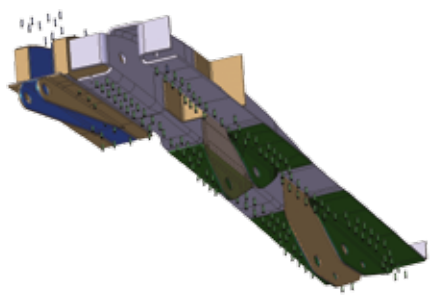

Figure 3. Modeling of rivets for load introduction rib (LIR)

attachment to the flap drive, and rivets to attach the assembly to the flap skin (Figure 1). The team's goal was to decrease manufacturing costs by simplifying the LIR's geometrically complex pre-form so that its thickness was uniform, except in those areas where pre-forming could be relatively simple and inexpensive. The team's solution used LIR profiles that allowed the pre-form layup to be automated, thereby minimizing manufacturing costs.

To model the new design, the EADS team needed to consider the complexity of the composite structures: thicknesses vary from four to ten millimeters; plies run out and are chamfered with resin pockets; gusset fillers are used in the radius. "Given the variables inherent in composites, we needed to use 3D elements for the calculation of composite load introduction and to obtain an accurate analysis of all stress components," says Havar. "Since delamination is a common type of failure for composite load introduction, both the transversal shear and peel stresses are of high interest."

With these factors in mind, the EADS engineering group constructed the LIR model using a variety of different Abaqus elements. For the flap, they used approximately 20,000 2D elements. For the LIR itself, and to calculate load introduction, they utilized approximately 100,000 continuum shell 3D elements, including hex-elements for the composite plies (with four to eight plies per element, orthotropic properties per ply, and 3D element orientation) and penta-elements for the ply runout. Isotropic properties were applied to the resin matrix. All together the LIR model had approximately 450,000 degrees of freedom (DOF) (Figure 2).

The engineering team also had to demonstrate that every single one of the 324 rivets in the assembly, which attach the LIR to the surrounding structure, was able to withstand the loading (Figure 3). "This is dependent not only on the attached structures but also on the rivet material and the size of the rivet itself," Havar says. To accomplish this, each rivet was modeled with an elastic connector between the parts. On one side the rivet was attached to the composite flap skin, and on the other side it was attached using a multipoint constraint (MPC) to distribute the loads over the skin thickness. The resulting connector forces are used to calculate the reserve factor for skin bearing failure and rivet fractures.

The engineers also examined the composite lugs used to attach the flap kinematic system to the LIR. The lugs were analyzed by applying loads using a rigid body element in the direction of the load. For each load case, the team created a new rigid body element due to the varying load conditions (Figure 4).



Figure 4. Composite lug model with load application through rigid body elements

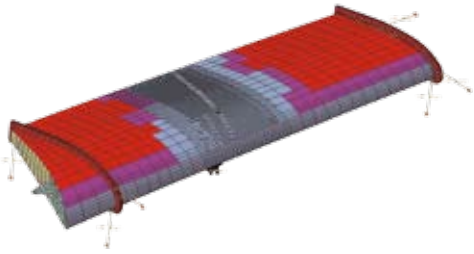

Figure 5. Load introduction rib integrated into the composite flap model with conditions defined for analysis.

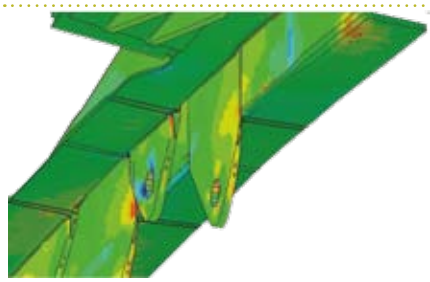

Figure 6A. FEA results showing stress in composite fiber direction

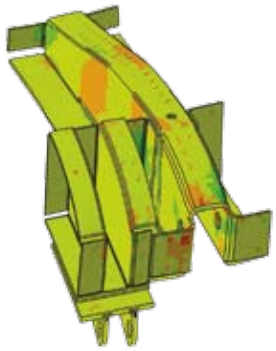

Figure 6B. FEA results showing local stress maxima above lug

To complete the LIR analysis, the EADS team calculated several load cases using the Abaqus implicit solver and postprocessing. In these scenarios, the flap was fixed at the edges with beam elements representing the test setup fixed at the ends in all three translational degrees of freedom (Figure 5). For some load cases, the beam elements at the outboard end were translated symmetrically causing an additional torsion on the flap. The analyses looked for intralaminar failure (within composite plies) and interlaminar failure (between plies), as well as rivet and lug loading.

Positive Results for Composites Analysis

If composites are key to the design of future sustainable "greener, cleaner" aircraft—with lighter weight, greater fuel efficiency, and fewer emissions—the results of the EADS composite analyses were positive on all counts: for the LIR, the in-plane and transversal stress components were within tolerances for the new composite design (Figure 6A); for all rivets, the strength specifications for connecting the LIR to the surrounding structure were met or surpassed; and for the composite lugs, the performance was found to be within industry safety specifications (Figure 6B).

As EADS looks to incorporate more composite structures into its aircraft designs, the Innovation Works Lightweight Design team will undoubtedly be busy with a long list of FEA projects. "There's no doubt that composite structures will increase in future aircraft," Havar says. "To keep up with our ongoing innovation, we'll need additional FEA capabilities." As design engineers and FEA software developers work together on solving the analysis challenges, it looks like composites will certainly be a part of new, more environmentally friendly aircraft, coming soon to a runway near you.

For More Information
www.eads.com
www.simulia.com/cust_ref

Bolt Studio: New Plug-in for Abaqus/CAE

Streamline the definition of bolts, nuts, and washers

General Motors (GM) designs a large number of bolted assemblies in their vehicle development programs. Like most manufacturers, GM is looking for ways to accelerate simulation activities to drive good design decisions earlier in the development process. Over the past few years, GM has been working with SIMULIA to look for creative ways to improve their simulation productivity for bolted assemblies.

The Bolt Studio plug-in addresses these requirements. It provides a streamlined method for defining bolts, nuts, and washers and places them into an existing Abaqus/CAE model. The plug-in, which was developed by the SIMULIA Great Lakes office in partnership with GM, is now commercially available to all Abaqus users.

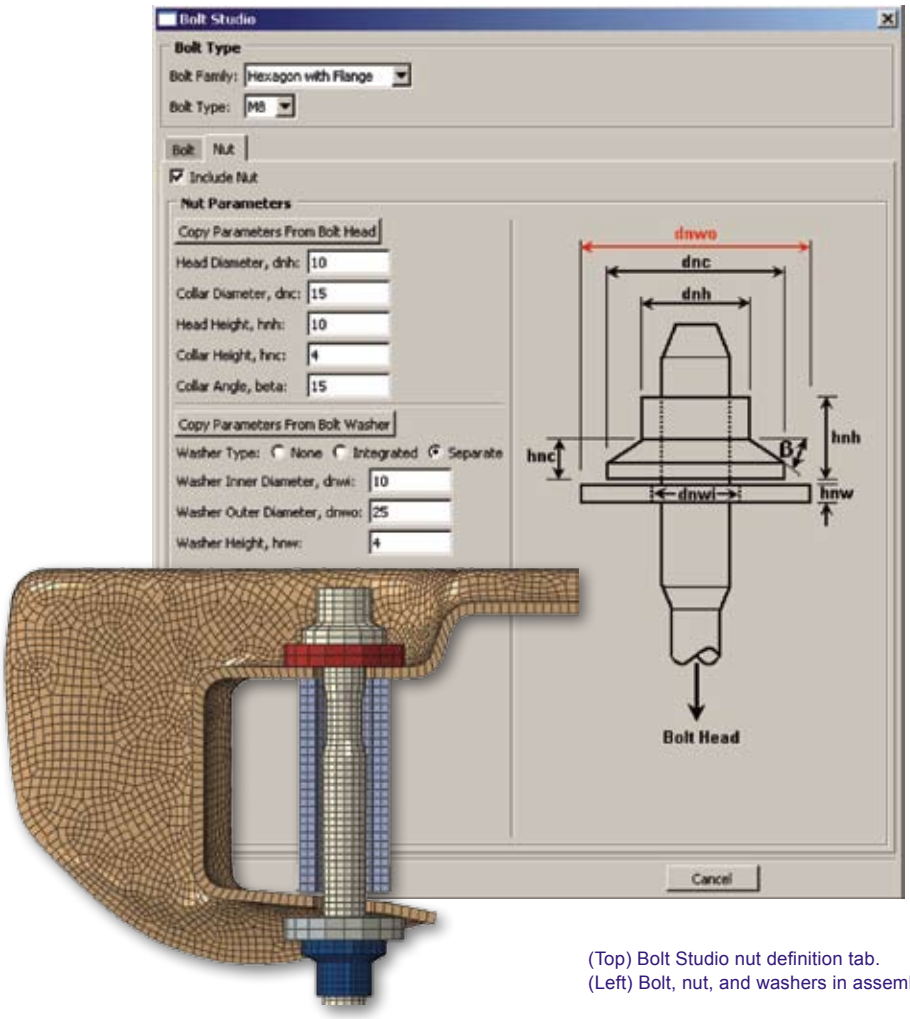

(Top) Bolt Studio nut definition tab.
(Left) Bolt, nut, and washers in assembly.

Motivation to Development

CAD representations of bolts typically have very detailed features that are more complicated than needed for most FEA purposes. Auto meshing of bolt geometry also leads to highly varied element size, distorted element shapes, and a high degree of freedom (DOF) count. In its CAE practice, GM prefers to simplify modeling assumptions, modeling the bolt and (where applicable) the nut and washer as resolved solids in assemblies. This allows parts to be meshed using modest-sized first-order hexahedral elements, dramatically reducing the DOF count.

Another motivation for this tool was to easily position the parameterized bolts within an assembly comprised of geometric parts or orphan mesh parts. In some cases at GM, the parts are imported into Abaqus/CAE as orphan meshes generated by other FEM tools.

Plug-in Description

Bolts, nuts, and washers are generated parametrically within Abaqus/CAE, and then meshed using a hexahedral mesh with a heuristic mesh size. Users can control the default set of bolts displayed in the interface via a simple Python-based configuration file. The bolt is automatically partitioned, and the specified pre-loading applied.

During usage, when a bolt type is selected, the dialog is automatically updated to display the bolt type's specified values, and the dialog box contains tabs for bolt and nut definition. The user can override the selected bolt type's values and choose whether or not to include a washer in the assembly. Two washer options are given: integrated (the bolt and washer are generated as a single component) and separate (individual parts are generated for the bolt and washer).

From the "Bolt" tab, users can also specify the pre-load to be applied to the bolt, as opposed to automatically defining pre-load by placing it in an assembly. Once the bolt dimensions have been defined, users can switch to the "Nut" tab to control nut definition.

Once the bolt and nut have been defined, users will press the "Continue" button to begin positioning the components into the assembly. The dialog box will then lead users through the placement process via a series of questions. Once this process is complete, the bolt, nut, and washers are created and positioned in the assembly and a bolt load is applied. The questions are then repeated so that multiple bolts of the same type can be positioned in the assembly. The placement questions are dynamically modified based on the users' previous answers.

Positive Impact at General Motors

At GM, this plug-in has been pre-loaded with bolt types and parameters from GM's global fastener catalog and incorporated into a larger toolbox of plug-ins called GM BoltStudio. GM BoltStudio has been made available to the CAE community and has resulted in a significant time saving in the setup of the analyses, together with greater consistency in modeling.

For More Information
www.simulia.com/products/bolt_studio
www.simulia.com/cust_ref

Abaqus 6.9 Student Edition – Exceptional Value for a Small Price

Whether you are a student or a practicing engineer interested in increasing your knowledge, the Abaqus 6.9 Student Edition provides easy access to the same advanced technology used by FEA professionals all over the globe.

Designed for personal educational use, and with a maximum model size of 1,000 nodes, Abaqus 6.9 Student Edition includes the core Abaqus products: Abaqus/Standard, Abaqus/Explicit, and Abaqus/CAE.

As in the professional release of Abaqus, the Abaqus 6.9 Student Edition features enriched capabilities for modeling, meshing, contact, materials, and multiphysics. The full HTML documentation set provides users with thorough, searchable resources installed locally on their PCs. Detailed information, including release highlights, is always available and easy to find. Highlights include:

- The Extended Finite Element Method (XFEM) has been implemented in Abaqus, providing a powerful tool for students simulating crack growth along arbitrary paths that do not correspond to element boundaries. In the aerospace industry, XFEM can be used in combination with other Abaqus capabilities to predict durability and damage tolerance of composite aircraft structures.
- The general contact implementation offers a simplified and highly automated method for students to define contact interactions in a model. This capability provides substantial efficiency improvements in modeling complex assemblies such as gear systems, hydraulic cylinders, or other products that have parts that come into contact.
- A new cosimulation method allows students to combine the Abaqus implicit and explicit solvers into a single simulation—substantially reducing computation time. For example, automotive engineering students can now combine a substructure representation of a vehicle body with a model of the tires and suspension systems to evaluate the durability of a vehicle running over a pothole.
- Abaqus/CAE provides faster, more robust meshing and powerful results visualization techniques.
- A new viscous shear model allows simulation of non-Newtonian fluids such as blood, paste, molten polymers, and other fluids often used in consumer product and industrial applications.

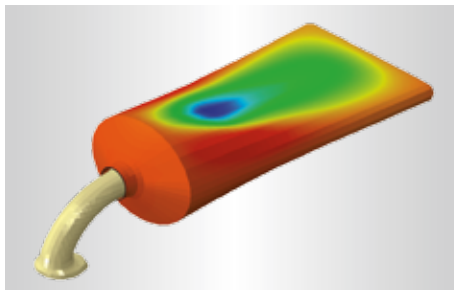

This paste-dispensing simulation is enabled by a new viscous shear model in Abaqus 6.9 Student Edition for simulating the behavior of non-Newtonian fluids.

For More Information
www.simulia.com/academics/student

What's New in SIMULIA Training

SIMULIA is pleased to announce several new training offerings including two updates to its instructor-led course catalog, a new web-based training offering, and two more training initiatives.



Instructor-led Courses

We now offer two courses on tire modeling. ***Tire Analysis with Abaqus: Fundamentals*** is a two-day course that focuses on basic tire modeling workflows, including axisymmetric and three-dimensional model building. A two-day advanced course, ***Tire Analysis with Abaqus: Advanced Topics,*** provides a closer look at advanced tire modeling techniques. Some of the course topics include linear dynamics, steady-state transport, and hydroplaning (using the Coupled Eulerian-Lagrangian technique).

Our popular ***Contact in Abaqus/Standard*** course has been retired in favor of a new course, ***Modeling Contact with Abaqus/Standard***. This new two-day course is strongly example-driven and provides extensive hands-on workshop experience, focusing on topics such as general contact, surface-to-surface contact, and frictional sliding.

Web-based Training

The ***Introduction to Abaqus 6.9*** website, accessible from SIMULIA Answer 4177, contains a series of presentations introducing Abaqus 6.9. The website contains a number of detailed demonstrations that are designed to help you make the most of what Abaqus 6.9 has to offer.

Training Initiatives

To help ensure our customers get access to the training they need on SIMULIA products, we have created the ***Bring a Colleague*** program. This provides a training fee discount when multiple registrations are received from a single customer site. With discounts of up to 40%, company training budgets should stretch a little further. Note that this program is only valid for a limited time (until February 2010).

You may already be familiar with SIMULIA's extensive public training schedule. But did you know that SIMULIA offices can also provide on-site training or customize courses to suit your needs? And now, if you can't find the course you want at the time and location you need, you can ***Request a Course*** to let us know exactly what you want. This new program has just been introduced in the U.S. and will soon be available elsewhere.

For More Information
www.simulia.com/services/promo_colleague
www.simulia.com/services/training_request

Replacing Nature's Shock Absorbers

Scripps Health researchers use Abaqus to optimize new knee replacement designs and explore surgical alternatives

Tiger Woods' infamous knee injury occurred in 2008, around the same time that the Shiley Center for Orthopaedic Research & Education (SCORE) at Scripps Clinic in California published a study of knee replacement patients with tiny computer chip implants added at the time of surgery. The chips sent radio telemetric data to receivers that recorded the stresses on the knee joint while golfing. "The force we measured in our patients—who were nowhere close to Tiger's skill level—was four and a half times body weight on the leading knee when they were hitting a drive," says the laboratory director, Darryl D'Lima, M.D. Ph.D. "So his injury came as no surprise to us."

The researchers are now monitoring the same implant patients as they ski. "It is our goal to study the effects of a whole range of movements on knee health," says D'Lima.

Knees Are the Body's Achilles Heel

Your knees are at risk for damage and/or arthritis over time because of something that everyone does: grow older. "Mother Nature designed the human knee to last about 30 years," points out D'Lima. "But the human lifespan has expanded much further than that, and evolution hasn't caught up."

Tiger Woods' ACL (anterior cruciate ligament) injury responded positively to microsurgery and physical therapy. But many people do not fare so well if they sustain damage to a critical cartilage deeper inside the knee: the meniscus.

The meniscus is made up of two C-shaped pads of cartilage tissue, located between the joints formed by the bottom of the thigh bone (femur) and the top of the shin bone (tibia). When a meniscus is torn, or wears out, the knee can lock up, making walking impossible. Because the meniscus has a very poor blood supply, it does not heal well on its own.

Fifty years ago, surgeons solved the problem by removing the entire damaged meniscus because they thought it didn't serve any purpose. Patients walked out the hospital door, but five years after meniscus removal they were back—with osteoarthritis (OA). Removing only damaged parts worked better, but OA still developed after 15 years.



"If we'd only had FEA back then, surgeons would have known that tissue removal was the wrong way to go because it takes away key biomechanical support of the knee," says D'Lima. The meniscus turns out to have a very important function as both a spacer and a shock absorber, providing load sharing, contact stress amelioration, and stability—all of which can be studied with FEA.

FEA and MRI Help Model the Knee

D'Lima's research team is using Abaqus FEA to make "virtual" computer models of human knee components on which they can test a variety of potential replacement parts and surgical techniques. "I've only been able to solve the complex material and contact problem to my satisfaction in the last couple of years since I started using Abaqus," he says.

Some of the data used to set up the FEA models comes from those earlier implant patients who golfed and skied while sending out radio telemetry. "The sensors in our patients' knees provided us with force measurements that we were able to use as load inputs," D'Lima says.

Meniscal replacements are the holy grail of a number of research projects, at Scripps and elsewhere, that aim to help patients with damaged menisci avoid knee arthritis entirely by implanting allografts (from cadavers), artificial biomaterials, or even tissue engineered from the patient's own cells.

Whatever the materials being proposed for meniscus replacement, a number of problems need to be solved in order to achieve optimum knee function. Among these are duplicating complex material properties, matching the size and shape of the replacement to the patient, and figuring out how to attach it in place. "For each of these challenges we are finding that FEA, combined with magnetic resonance imaging (MRI), provides the tools we need to study the alternatives," says D'Lima.

The pairing of MRI and FEA has greatly benefitted medical R&D in recent years for accurate modeling of human body parts. Design engineers can now convert two-dimensional MRI "slices" into stacked 3D CAD models detailing bone, articular cartilage, other soft tissues (like the ACL) and meniscal cartilage. During the process of modeling, SCORE found that the golfing, skiing knee-replacement patients again proved useful, this time providing data for boundary conditions.

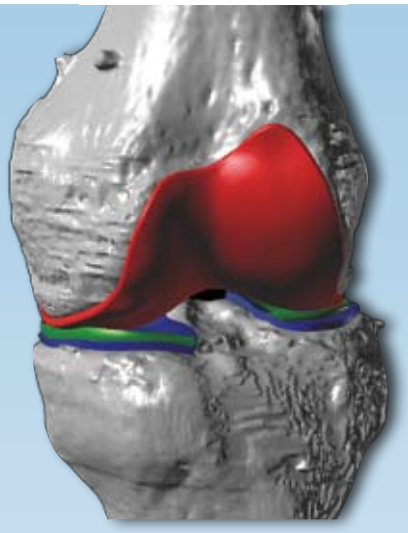

A 3D CAD model was created from two-dimensional MRI images of a knee joint.

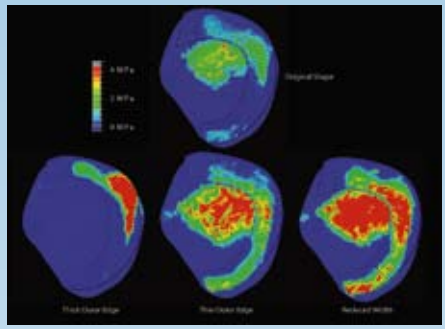

Abaqus FEA models of knee menisci demonstrate the importance of dimension (size and shape) to optimal stress reduction in the knee.

It's All About the Materials

The first modeling challenge was representing the material properties of the meniscus accurately. "One of the reasons it's difficult to study biological tissues, especially the meniscus, is that every possible complexity exists within the same material," says D'Lima. "Abaqus FEA can represent any characteristic we need and also stack all of the material properties into the same model."

Once their models were set up, the group validated the contact algorithms, using pressure data physically recorded inside actual joints of cadaver knees, against their MRI/FEA model predictions.

SCORE next turned its attention to shape. It turns out that the variation of thickness of the meniscus is critical. "Small changes in dimension, even just ten percent, mess things up," says D'Lima. "If the outer edge of the meniscus is too thick or too thin, when you run the FEA analysis you see excessive stress creep in. Nature gets it right during development because everything—bones, ligaments and cartilage—grows to fit each individual."

FEA Helps Evaluate Alternative Surgical Techniques

Another research challenge was the question of how best to fix a replacement meniscus (with either bone plugs or stitches) in its new knee environment. Here again, FEA provided a useful analysis tool: The SCORE group researched suture materials to get strength and stiffness data and incorporated "virtual stitches" into their FEA knee models to study the contact stresses. They determined that a suture stiffness of about 50 Newtons per millimeter approached the performance of bone plugs (a more complicated surgery). "So you can get the same mechanical fixation with less invasive surgery," says D'Lima.

Optimizing Custom Meniscal Replacements

"Now that we have the design pipeline in place, we can essentially begin optimizing knee replacement to each person who needs it," says D'Lima. "We can identify what shape is best for a particular individual, what are the material properties that will work best in that person's knee, and make recommendations about securing the implant surgically."

To generate and explore the algorithms that best describe the "perfect" meniscus for a single patient, D'Lima's group has recently begun employing SIMULIA's Isight for simulation process automation and design optimization. "Isight is a very useful tool for customization," says D'Lima. "We're using it to optimize the material properties and shape of the meniscus. With our experimental data in hand, we can keep changing the characteristics of our finite element model until we identify that particular complex material model that satisfies all our conditions."

For More Information
www.scripps.org/score

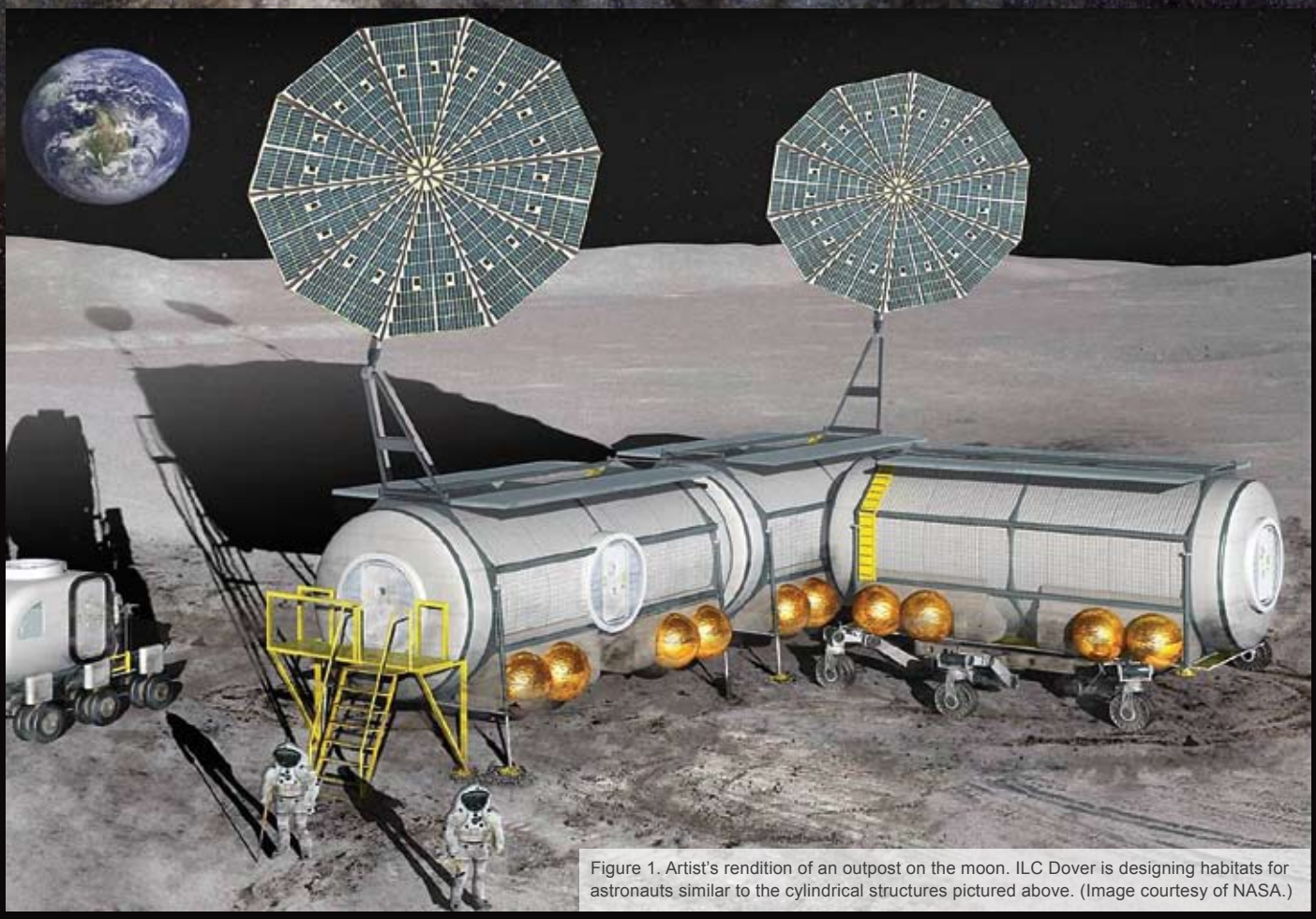

Figure 1. Artist's rendition of an outpost on the moon. ILC Dover is designing habitats for astronauts similar to the cylindrical structures pictured above. (Image courtesy of NASA.)

Camping on the Moon—or even Mars

ILC Dover Uses Realistic Simulation to Design Habitats for Astronauts

ILC Dover, located at One Moonwalker Road, made spacesuits for NASA's Apollo astronauts in the 1960s and 70s and gear for the space shuttle crew that repaired the Hubble telescope earlier this year. Its latest out-of-this-world product is inflatable houses designed for future outposts on the moon—or even Mars.

A leader in the development of flexible material systems that withstand extreme environments, Delaware-based ILC designs both hardware and softgoods for the wide-ranging challenges of space exploration—from the high heat of re-entry, to the profound cold of a lunar night, to the airbags that cushioned the landings of the Mars Rovers. ILC makes a multitude of earthbound commercial products as well, from innovative containment systems for packaging powder pharmaceuticals to highly advanced protective military gear.

Still, it's the inflatable lunar habitat idea that grabs our imagination. From the first moon landing in 1969 to the last trip there three years later, no one ever spent more than three days on the surface, and they took the lunar module with them when they left. In the 21st century, NASA's proposed Constellation program—to return to the Moon, set up a permanent base, and from there send people to Mars—started taking shape. This program created a host of new challenges, including the most basic one: if you are living on the Moon for months on end, where is everyone going to sleep?

Launching a House into Space

ILC's engineers are working on the answers to that question. In partnership with several different branches of NASA, including Langley and the Johnson Space Center, the company has been developing ideas for different configurations of lightweight space habitat structures (Figure 1).

"When you are launching equipment into space on a rocket, everything needs to be as lightweight as possible, and packed densely," says Cliff Willey, ILC program manager of space inflatables. "Then you want to deploy something that expands on the surface of the moon without a lot of mechanisms. An inflatable, soft item does all that."

ILC recently completed the design work on a "mid-expandable" habitat with two hard endcaps and a deployable softgoods section in the center (Figure 2). The softgoods section packs into the endcaps and then unfolds and inflates via air pressure, more than doubling in length. A unique fabric lobe system allows for a structure that is much lighter in weight with a higher volume than a similar hard material configuration would be. The endcaps are where doors, airlocks, and other structures are mounted.

Harsh Lunar Environment

The Moon environment contains a host of external hazards to consider, including extreme temperature fluctuations—which softgoods withstand much better than metals—radiation, dust, and low gravity. The inflation pressure on the two innermost layers of the structure presented the biggest challenge to ILC's design engineers.

"You have to come up with a pretty clever design to handle the high loads inside a dwelling that is pressurized to a level in which astronauts can live," says Ric Timmers, ILC Senior Analysis Engineer. In the zero-atmosphere Moon environment, any significant fabric failure would result in a devastating outward explosion of the structure.

ILC's solution was to design an interlocking webbing net over a gas-impervious, coated fabric. The fabric was deliberately oversized so that it would bulge out slightly between the webbing panels, transferring the pressure load to the webbing. This unique combination of fabric and webbing working together would allow the habitat to be inflated to nine psi (an acceptable pressure for humans living on the Moon), which meets NASA's safety standards for space construction.

"Earlier, we were contemplating building a test rig and physically measuring the pressure load on the fabric, the tension in the webbings, the pressure behind the windows—all simultaneously—but we were looking at well over a million dollars for a test like that," says Willey. "We couldn't rely on trial and error. We had to be able to build a reliable, finished product design the first time out."

Realistic Simulation Provides Down-to-Earth Answers

So the group turned to Abaqus finite element analysis (FEA) software to test virtual models of the fabric and webbing under varying load scenarios. "We relied heavily on Abaqus for this project," said Timmers. "It would have been pretty risky to do this without FEA—you had to sleep at night!"

ILC began its analysis of the fabric/webbing system by modeling a "unit cell" of fabric constrained by a square of the webbing net. The model was oversized slightly to simulate the bulge of fabric between webbings. The nominal pressure was applied to the model and Abaqus calculated the resulting stress (well within NASA's required safety factor of four) in the material (Figure 3).

"Using Abaqus FEA to identify the allowable limits of the fabric's performance was very useful because with this type of structure you have to be really sensitive to total mass," says Timmers. "When we found one material that worked, we could use Abaqus to virtually test another, lighter material to see how much we could save on total weight and still provide the right factor of safety."



Figure 2. ILC's "mid-expandable" habitat prototype is stored in two hard endcaps during rocket transport to the moon and then deployed on the lunar surface with air pressure, doubling in length.

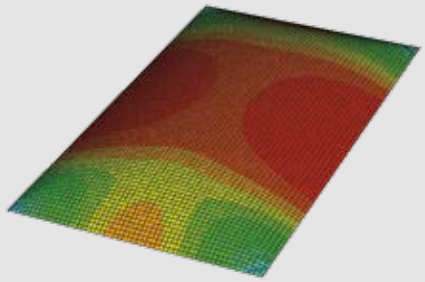

Figure 3. Abaqus FEA stress analysis of a "unit cell" of habitat fabric demonstrated that the maximum loads were well within NASA's required safety factor limits.

Keeping the Web of Safety Intact

In addition to low stress in the fabric restraint system, another important contributor to the stability of the habitat was evenly balanced loading of the ring of webbing itself. To test this part of the design, the ILC team used Abaqus to simulate the critical axial (end-to-end) length of the webbing.

"Our biggest concern this time was that any deviation in the length of one webbing could foreshorten the whole system, concentrating 100 percent of the load on a single section and leading to a cascade of breakage," says Timmers. When one webbing was shortened by just 0.125 percent, the analysis results showed that the load on it jumped to 4,815 pounds, versus 3,600 pounds on the rest of the webbings. But since the breaking strength of the webbing was 24,000 pounds, the safety factor was still met.

Camping on the Moon—or Even in the Antarctic

With their habitat design complete, ILC teamed with NASA to build a prototype for the "Camping on the Moon" exhibit, now on display at NASA Langley. Physical verification tests of a full prototype—including a deployment run-through, a high-pressure test, and tear-resistance evaluation—are pending further funding.

"We may very well run these tests ahead of time with Abaqus," says Timmers. "It's ideal to use a combination of modeling and testing back and forth, applying FEA to dial into just a few possible scenarios."

Whatever the timeline for deploying astronaut habitats beyond Earth, ILC's unique approach to such structures has applications closer to home as well: potentially as hyperbaric chambers for health clubs or hospitals or as dwellings for polar- or desert-based scientists. A similar habitat designed with Abaqus Unified FEA has been tested in the harsh environment of the Antarctic and will be going to the Arctic as well.

For More Information
www.ilcdover.com
www.simulia.com/cust_ref

Aerospace Innovation Requires Simulation Technology and Methods Evolution

Kyle Indermuehle, Aerospace Industry Lead, SIMULIA Technical Marketing



Innovative materials, new manufacturing processes, adoption of the latest technologies, and unique methodologies have always been the driving factors for the next generation of aerospace products. The aerospace industry tends to take large steps in product innovation which are enabled through the application of new technology and engineering methods.

Looking at the transformation of aircraft over the past 100 years, the steps forward in technology are clearly visible. In the earliest years of flight, the construction of aircraft was primarily wood and fabrics. By 1919, the first all-metal aircraft took to the skies. The Junkers J-13 (later known as the F-13) was not only the first all-metal aircraft, but that technology leap also enabled it to be the first practical cantilever (internally braced), low-wing monoplane.

Just five years later, Junkers was supplying 40 percent of the world's transport aircraft[1]. In 1933 another innovative aircraft made its first flight, the Douglas DC-1. The DC- series of aircraft (DC-1, -2, and -3) was hugely successful. One of the keys to the design of the aircraft was the methodology of letting science drive the design and shape. Its shape was a result of extensive wind tunnel testing which led to turbulence-reducing wing-fuselage fillets and payload-enhancing wing flaps[1]. More recently, two of the more innovative aircraft designs have been Lockheed Martin's Stealth F-117 and the Boeing 787. As with all steps in product innovation, there are key technologies that enabled these designs. The very distinctive faceted shape of the F-117 was a direct result of engineering software and computational power available in the late 1970s. Lockheed Martin developed a computer program called Echo that drove the shape of the aircraft to achieve its stealthy shape. And today, the Boeing 787 is scheduled to be the first commercial aircraft to have the majority of the structure built out of composites.

The history of the aerospace industry clearly illustrates how significant breakthroughs—whether in aircraft, satellites, spacesuits for astronauts, or other successful new products—are driven by innovations in materials, technology, and methodologies. SIMULIA's realistic simulation solutions are enabling companies to improve existing processes and develop new methodologies. Our R&D teams are committed to developing new analysis capabilities, improving high-performance computing, enabling true multiphysics simulation, and providing the tools needed to perform multi-domain optimizations. These capabilities are being developed to support industry-specific workflows and are the building blocks for the next step in aerospace innovation.

Emerging Trends: Simulating Events, Not Just Load Cases

Traditionally, aerospace structures are analyzed to meet a specified load case. This load case might be a static load, a dynamic load, or a thermal load. But in reality, vehicles are subject to "events"—not just "load cases." For example, a load case for a landing gear may be a specified vertical force and lateral force. Compare that to the real landing event, where the landing gear is deployed, locks into place, has aerodynamic forces on it, possibly strikes a bird or debris before landing, and then impacts the runway on the landing. Assumptions have been made to define the load case that represents the event. Companies today are reducing the number of assumptions they are making to more accurately simulate the event and understand their product's behavior. To realistically simulate the event, the computer model must incorporate mechanisms, control systems, fluid modeling, explicit dynamic impact modeling, nonlinear stress analysis, contact behaviors, and damage models (maybe even composite damage models). In addition, the industry wants to optimize these complex models.

Abaqus FEA provides the technology to perform full-event simulations, which is enabling companies to evolve their methodologies to take advantage of these realistic simulation capabilities.

Large-Scale Nonlinear Analysis

Traditionally, nonlinear analysis has been used at the component level to understand joint details, failure modes, and composite fracture issues. Now, nonlinear FEA is being used more frequently for the large-scale simulation of whole aircraft structures, such as wing assemblies, fuselage sections, and tail-planes[2]. Until recently, these types of analyses would have been undertaken only as a last resort—toward the end of the design phase, or even later—in order to solve a challenging problem related to manufacture or certification. Today, however, manufacturers are developing analysis methods and processes, which allow advanced nonlinear analysis to be applied during the design phase well in advance of the build and test phases.

High-performance computing (HPC) is a key requirement for large-scale nonlinear simulation. Large-scale aerospace models may have 10-20 million degrees-of-freedom (DOF), over 5,000 individual parts, and 10,000 fastener definitions, as well as contact and cohesive surface definitions.



Abaqus/CAE free body diagram for an aircraft landing gear strut.

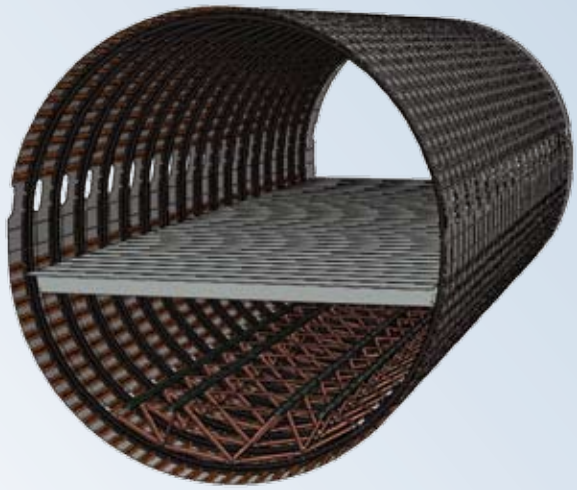

Example of a large-scale fuselage model.

Solving these large-scale problems requires tens to hundreds of processors working in parallel. The SIMULIA development team is creating new algorithms to take advantage of today's computational resources.

Managing It All

The development and implementation of new methodologies has created the need to capture and share these methods as standard procedures. The large models and multiple simulation runs are also creating the need to manage and secure the newly created data. SIMULIA has developed a new solution for Simulation Lifecycle Management (SLM). The new product suite provides online collaboration capabilities to allow distributed teams to easily share simulation methods and results to improve confidence in the decision-making process. It also provides the ability to manage simulation data at the individual, workgroup, and/or enterprise level. The data management is inclusive of processes, model files, configuration data, requirements, and results.

Customers Are the Key

A significant portion of our new product capabilities are developed through customer-requested enhancements and direct working relationships with our customers and partners. One such partnership, with Boeing Commercial Aircraft Group, enabled us to deliver the Virtual Crack Closure Technique (VCCT) within Abaqus/Standard. SIMULIA also participates in the FAA Center of Excellence workshops and the CMH-17 (Composite Materials Handbook) working group. By working with industry and customers, we are able to understand the aerospace industry processes and simulation requirements and align our development efforts towards solving real engineering problems.

We invite you to join us in this dialogue on simulation trends in aerospace and in our efforts to provide better simulation tools for an industry eager to move forward.



Kyle Indermuehle
Aerospace Industry Lead,
SIMULIA

Kyle Indermuehle is the Industry Solutions Manager at SIMULIA focused on the aerospace industry, and specifically composites. Prior to his role at SIMULIA, Kyle worked on a variety of aerospace programs including the Pratt & Whitney RL10B-2 rocket engine, analysis and testing of Unmanned Aerial Vehicles, and satellites. Kyle received his B.S. in aerospace engineering from Purdue University and his M.S. in structural engineering from UCSD.

1. http://www.airspacemag.com/history-of-flight/Airplanes_that_Transformed_Aviation.html

2. Tim Brown, Airbus, *Working to Meet the Challenges of Next Generation Composite Wing Structural Design*. RAeS Conference: Challenges for the Next Generation - Concept to Disposal, October 14-16, 2008

For More Information
www.simulia.com/solutions/aerospace

Designing a Lighter, Stronger Aircraft

Grupo TAM Uses Abaqus FEA and Isight for Composites Analysis and Optimization

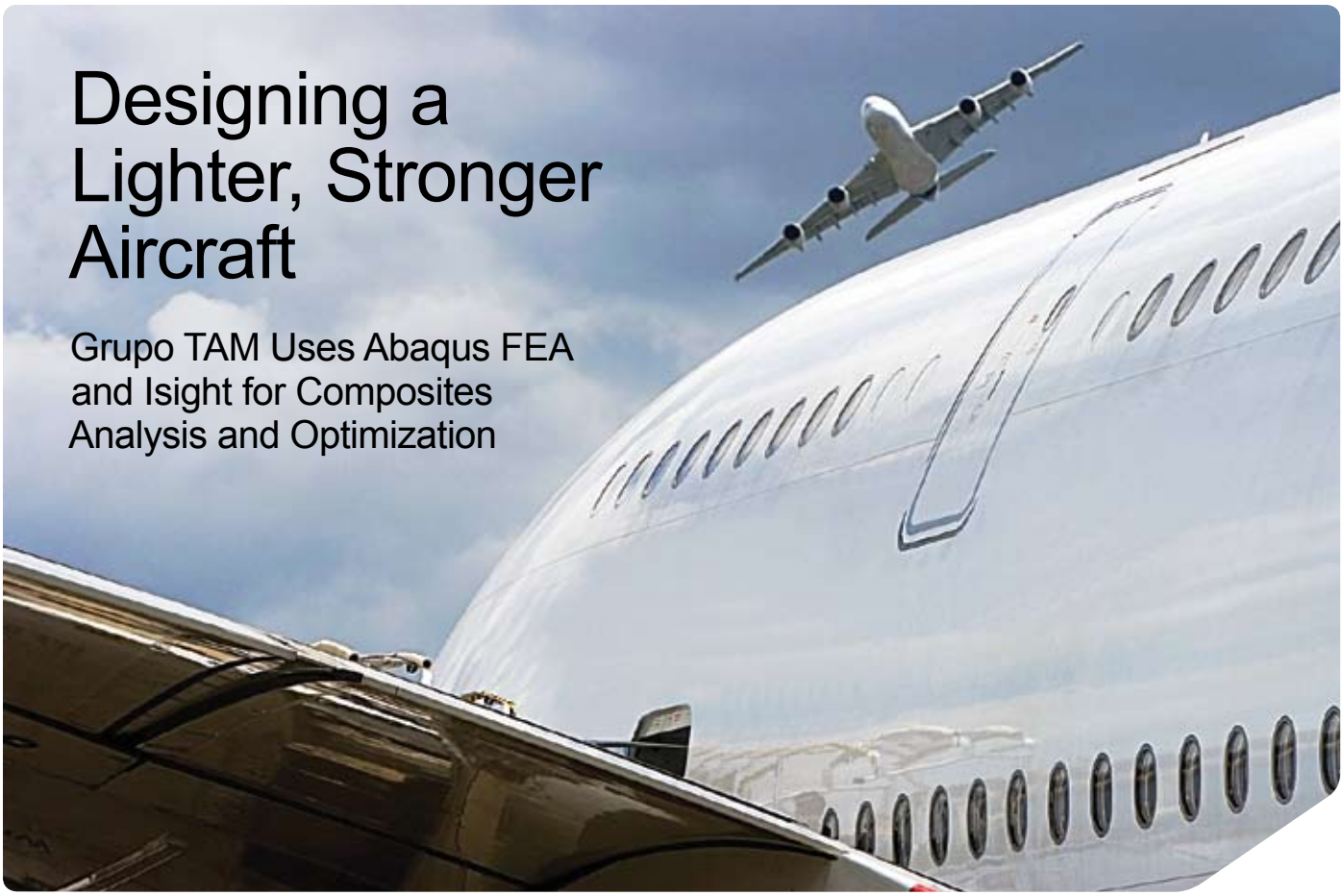

Aircraft manufacturers in every market are looking increasingly to composite materials to create vehicles that are lighter, stronger, and easier to maintain. Lighter-weight aircraft mean increased range, which in turn means lower fuel costs—a critical factor, especially in commercial jet design, in a petroleum-dependent world.

The Boeing 787 Dreamliner will be the first commercial jet to be more than 50 percent composite by weight. The Airbus A380, with deliveries that started in 2008, is also increasing its reliance on composites. With the materials paradigm shifting in aerospace, it was predicted at the CompositesWorld 2008 conference that demand for composites would grow 30 percent in the general aviation market over the next three years.

Today, carbon fiber reinforced polymer (CFRP) is the most common composite used in the aerospace industry. Carbon fibers have a micro-graphite crystalline structure and a pattern similar to chicken wire; they derive their strength from layering, or sandwiching, multiple sheets in a polymer matrix. CFRP composites, with their attractive weight-to-strength ratio and other beneficial material properties—high tensile strength, high elastic modulus, heat resistance, low thermal expansion, and chemical stability—are highly desirable in high-performance aerospace and automotive applications. They are also used widely in sailboats, canoes, bicycles, tennis rackets, and golf clubs, as well as consumer goods such as laptops and stringed instrument bodies. Like any material, composites have their own set of manufacturing, assembly, and lifespan challenges that must be fully understood to make their use in critical applications, such as commercial flying, acceptable and safe.

The manufacturing of aircraft has evolved into a process in which a variety of specialized manufacturers are contracted to produce structures or sub-assemblies that are then assembled into a finished aircraft by an OEM. Grupo TAM, headquartered near Madrid, Spain, is one such specialty firm that manufactures auxiliary components with state-of-the-art CNC tools. About 40 percent of its business is in aeronautics, including the design and manufacture of composite structures.

To fully understand the performance of these composite components, as well as assembly and maintenance challenges, a Grupo TAM structural analysis engineering team, headed by Abel Pardo and Jose Carlos Fernandez, conducted a series of in-depth analyses of components including a curved, stiffened composite panel, typical of a fuselage or fan cowls (Figure 1). The panel and stiffeners are made of uniaxial and biaxial carbon fibers that are bonded with adhesive. The team focused on the composite manufacturing variables and tolerances for the panel, including material properties, geometric tolerances, thicknesses, and lay-up alignment axes, as well as the delaminations and disbonding that can occur during the manufacture, assembly, and service life of the composite structure. “The objective of our analyses was to identify the influence of deviations, defects, and damage and to consider it during the initial design phase,” says Pardo. “In this way non-

conforming parts would be minimized, with associated cost savings."

Abaqus FEA Creates Baseline for Composite Analysis

For the intact panel analysis, the Grupo TAM engineers chose Abaqus FEA in large part for its ability to handle both implicit and explicit nonlinear analysis. "We needed more than our in-house tools to conduct the analysis," says Fernandez. "We chose Abaqus for its extensive composite capabilities and to meet the high quality standards required by our customers." They also chose Isight from SIMULIA for its Monte Carlo and Stochastic Design Improvement features, its sampling capability, and the ease with which it can interface with in-house software. Isight allowed the team to conduct trade-off studies with their Abaqus models and achieve rapid design optimization.

To carry out their FEA analysis of the intact panel, the team started with nominal values typical of the aeronautics industry for all the variables. They considered three load cases—two with a uniform aerodynamic pressure on the panel (one directed towards the inside of the structure, the other directed out), and a third with a shear load directed axially across the face of the panel (Figures 2 and 3). The team then performed two additional analyses of damaged panels—one with a delamination in the middle of the panel, the other with two disbondings under the panel stiffeners.

The team constructed their geometry model in CATIA V5 from Dassault Systèmes, using S4R planar elements for the skin and stiffeners; the C3D8R element for the adhesive; shell composite with a single ply for the delamination analysis; and, for the disbonding analysis, a homogeneous solid in which mechanical properties were reduced six orders of magnitude. The model had approximately 49,500 elements, 45,400 nodes, and 272,600 variables.

The results of all the FEA analyses—both for intact and damaged components—provided baseline data that were then used to optimize the design and build of the composite panel using Isight.

Isight Helps Optimize Composite Performance

There are a large number of variables to consider when designing a composite panel for an airplane, and it is often difficult to sort out which variables might be key to improving structural strength and performance. In such instances, a stochastic approach is useful for managing the enormous amount of data inherent in composite analysis. Isight streamlines this iterative solution process by providing an interactive graphical interface and automation features that enable tools like Monte Carlo, Design of Experiments, and Six Sigma. In this case the Grupo TAM team chose the Monte Carlo method, which is particularly useful when there is significant uncertainty in the variables and inputs. "The Isight solver allowed us to quickly evaluate a large number of design possibilities and identify those that meet our required parameters," says Pardo.

To begin the stochastic analysis in Isight, the Grupo TAM engineering team looked at the manufacturing variables and tolerances, as well as the range of damage during the component life cycle, determining that there were 58 important input variables. Statistical distributions for each variable were taken from either the baseline analysis data described above, or standard industry values. The team then built a calculation flow chart, which was accomplished using Isight's intuitive graphical tools and icons (Figure 4). Isight then automatically ran this analysis string repeatedly without the need for individual manual FEA runs. Each Monte Carlo simulation included between 100 to 800 samples. According to Fernandez, "Descriptive sampling was

Continued on page 18



Figure 1. Cylindrical composite fuselage panel stiffened with two stiffeners.

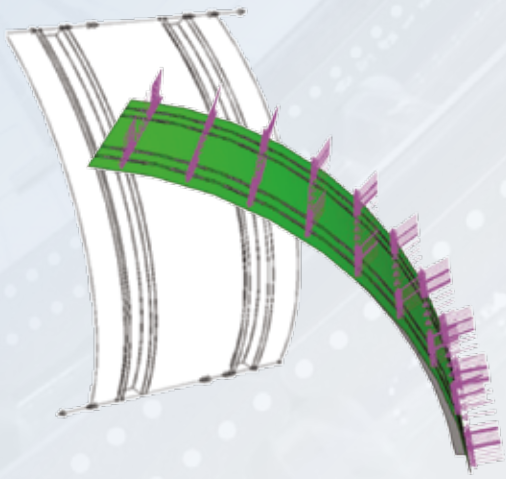

Figure 2. Composite panel with shear loads applied (left) and with axial, or aerodynamic loads, applied (right).

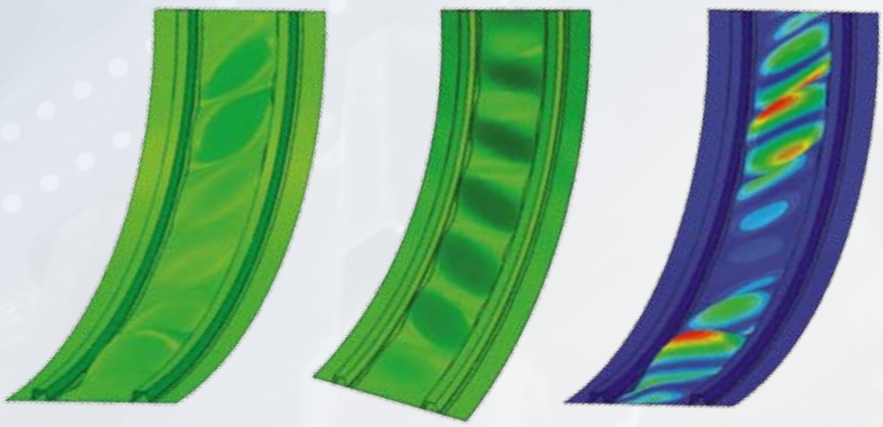

Figure 3. Composite panel with loads applied shows shear buckling (left), pressure buckling (center), and composite strain (right).

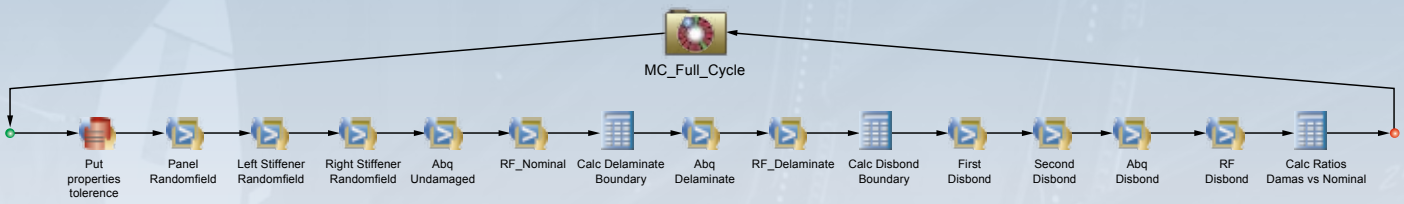

Figure 4. Isight's Monte Carlo simulation process flow as mapped out using the software's visual tools.

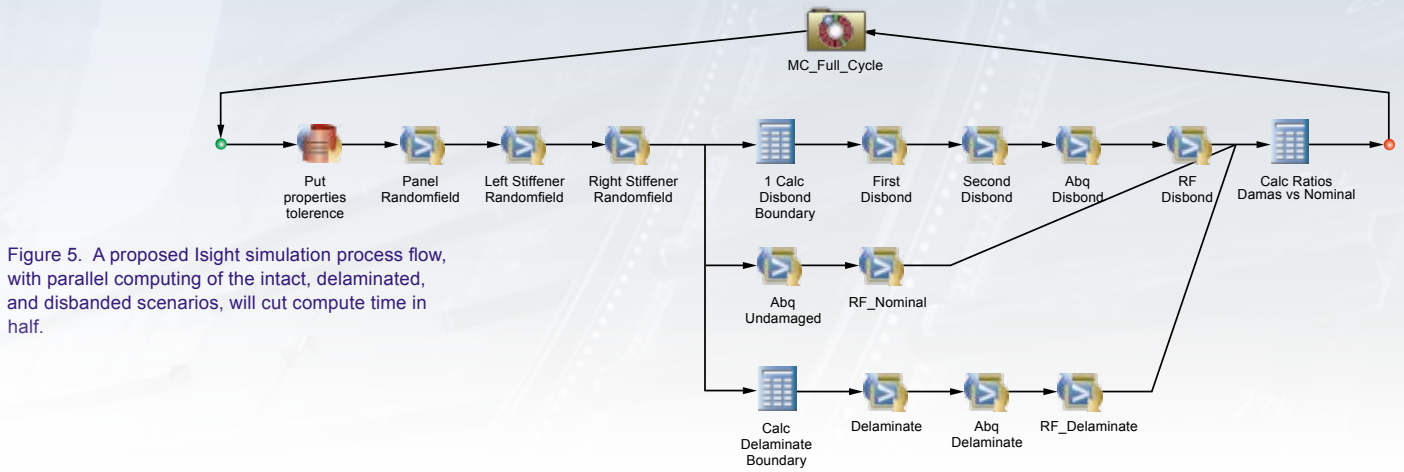

Figure 5. A proposed Isight simulation process flow, with parallel computing of the intact, delaminated, and disbanded scenarios, will cut compute time in half.

chosen because it has better convergence to the statistical distributions, and requires fewer iterations. In the end, this powerful computational process identified the most critical tolerances and variables for us."

With the results of the study in, Pardo says, "We now have a clear understanding of which variables are most critical to the manufacture of composite panels that will meet our stringent quality and safety criteria."

Optimization leads to cost reduction

While the goal of optimizing the composite panel with Abaqus FEA and Isight was to increase panel strength and improve performance, the process also provided insight into the costs associated with manufacturing, assembly, and maintenance. The engineering team reached a number of interesting conclusions. They found that buckling pressure was the most critical factor and that a tightening of material tolerance would lead to improved performance along with lower costs for quality control and maintenance. They also determined that other less critical tolerances could be relaxed, resulting in both material cost savings for the carbon fiber sheets and manufacturing cost savings where layup tolerances are involved. In addition, the analysis demonstrated that delaminate damage had a high impact on performance, while disbonding could be tolerated, especially with a new layup procedure. "All of these results," Pardo says, "lead to resource optimization—with a quality and maintenance plan focused on the most influential inputs."

> "We now have a clear understanding of which variables are most critical to the manufacture of composite panels that will meet our stringent quality and safety criteria."
>
> *—Abel Pardo, Grupo TAM*

Looking to the future, the Grupo TAM structural analysis department identified a number of developments that will further improve the overall cost evaluation process. For instance, parallel computing in Isight will cut computing time in half (Figure 5). And a design-to-cost strategy will be employed in which costing functionality, using software that is currently under development, can be incorporated into Isight. "This analysis process would lead to what we at Grupo TAM call robust design," Fernandez concludes, "robust, because it takes into consideration the entire product life cycle as well as all associated costs." Incorporating such cost considerations within stochastic analyses will undoubtedly provide tremendous value to manufacturers in any industry.

For More Information
www.grupotam.com
www.simulia.com/cust_ref

Preliminary Design of NASA's Ares V Launch Vehicle Optimized with HyperSizer for Abaqus

NASA's newest and largest space launch vehicle, the Ares V Heavy Lifter, includes three major composite structures: the payload shroud, interstage, and core intertank. To streamline the optimization of NASA's composite structures, Collier Research Corporation used HyperSizer combined with Abaqus FEA from SIMULIA.

The Ares V payload shroud is the most challenging design, as its bullet-shaped structure separates into four petals to release the lunar lander. Aerodynamic pressure on the shroud is resolved into internally distributed forces. Abaqus was used to compute the internal load path and load amount in the stiffened panel and the ringframes.

HyperSizer was then used to analyze, or "size," the panels' cross-sectional dimensions and layups. HyperSizer was able to predict the stresses and strains in the composite laminates and at each ply level for strength failure using damage tolerance allowables, test data, and correction factors. Buckling and crippling analyses were also performed. The newly "HyperSized" structure was then exported into Abaqus for redistribution of loads. This iterative process continued until convergence of load path was achieved.

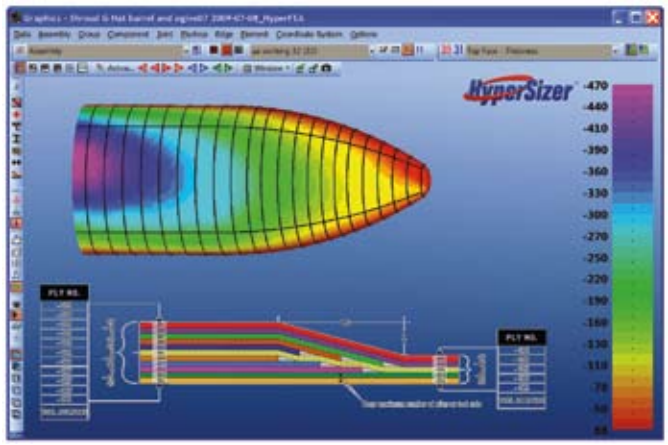

HyperSizer optimized model of the NASA Ares V Composite Shroud showing computed forces. Below the shroud is an optimized Composite Ply Sequence showing minimum ply drop-offs for streamlined manufacturability.

One key challenge is developing the most efficient composite layup sequences. The "Ply Compatibility" feature in HyperSizer helps stress analysts as well as design and manufacturing teams develop more practical composite layups. HyperSizer generates the Global Sublaminate Stack (GSS), intended to maximize the number of plies that can be put on the composite layup tool. The key is to minimize the number of ply "drops," allowing for fewer non-continuous plies. HyperSizer is capable of assessing well over a million possibilities to determine both the lightest-weight design and the most easily manufacturable design.

The NASA Advanced Composite Technology Team (ACT) performed multiple trade-off studies to design the strongest, lightest, most manufacturable composite launch vehicle—making the Ares V the next "giant leap for mankind" in large-scale optimized composite vehicles for future space flight.

For More Information
www.hypersizer.com

Partner Applications Extend Abaqus Composites Capabilities

New capabilities and enhancements for the realistic simulation of composites are added to the Abaqus Unified FEA product suite in every new release. Capabilities now include intuitive composites modeling and meshing, ply-by-ply postprocessing, fracture and crack growth, delamination using cohesive surfaces, interlaminar shear predictions, high-speed ballistic impact, post-buckled performance, and barely-visible impact damage (BVID).

Combining the composite capabilities in Abaqus with our partner products can provide significant opportunities to improve design and reduce physical testing. In addition to Hypersizer (mentioned above), add-on products from our technology-leading partners include:

Composites Modeler for Abaqus (CMA)

CMA, developed by Simulayt, Ltd., is completely embedded into the Abaqus/CAE interface and is available directly from SIMULIA. CMA allows users to perform draping analysis and calculate flat patterns, and automatically applies the draped ply orientations to the finite element model (FEM) on an element-by-element basis. It also enables sharing of layup and draping information directly with CATIA V5.

CZone for Abaqus (CZA)

Developed by Engenuity Ltd. and available from SIMULIA, CZA enables engineers to accelerate the design and evaluation of energy-absorbing composite components and assemblies. It allows the study of crushing behavior of composite structures—in automobiles, helicopters, aircraft, trains, and other transport vehicles—used to protect occupants and cargo from shock or injury during severe impact.

Helius:MCT

Helius:MCT, available from Firehole Technologies, is a composite damage analysis solution based on MultiContinuum Technology for composite structures. It operates at the fiber and matrix component level to determine damage initiation and predict damage propagation. The Helius:MCT package works as a plug-in to Abaqus/CAE as well as UMATs that couple to the Abaqus simulation.

For More Information
www.simulia.com/products/cma
www.simulia.com/products/czone
www.fireholetech.com/product/helius

Simulation of Bird Impact on an Aircraft Windshield

Nanjing University of Aeronautics & Astronautics

The January 2009 forced ditching of US Airways flight 1549 into New York City's Hudson River served as a reminder that bird strikes on aircraft pose a serious safety threat. While this particular incident was caused by birds striking both engines, a high probability exists that birds will impact and damage aircraft windshields. To gain a better understanding of how aircraft windshields perform during a bird strike, a research team at Nanjing University of Aeronautics and Astronautics in China has published a paper that compares physical tests with Abaqus FEA results.

During the physical experiment, five impact tests were carried out on three windshields composed of 16 mm thick polycarbonate shell. The "bird," a headless, legless, plastic-wrapped chicken with a mass of 1.8 kg, was propelled at an airplane windshield at velocities between 345 km/h and 380 km/h. Throughout the process, a high-speed camera captured the deformation of both windshield and bird. The experiment showed that the windshield survived, without obvious damage, when the bird speed was less than 345 km/h. However, when the bird speed was greater than 365 km/h, the windshield sustained serious damage. It was also observed that windshield failure did not occur during the initial impact, but rather a short time later due to the bending deformation.

These full-scale bird-strike experiments helped the researchers prepare for the structural design analyses by providing the dynamic failure position for the windshield, capturing the critical speed of the bird, identifying boundary and material properties of the windshield, and determining the degree of damage.

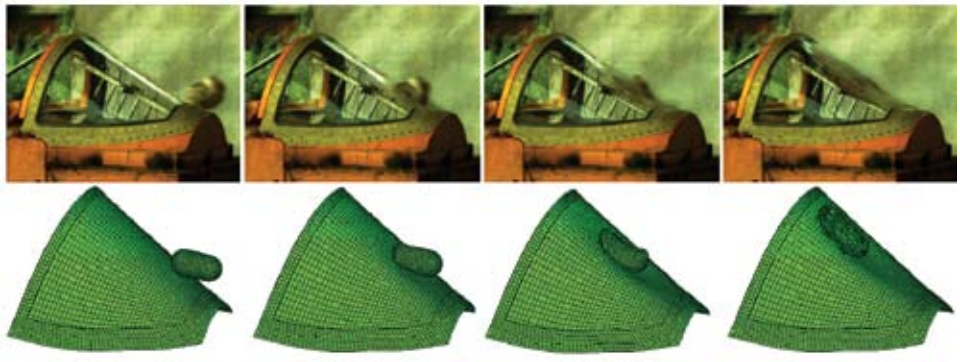

a) Time=0 ms b) Time=1 ms c) Time=2 ms d) Time=3 ms

Comparison of bird and windshield deformation between simulation and experiment.

A finite element model of bird impact on the windshield was then established to predict the damage initiation and propagation of the windshield using the nonlinear analysis capabilities within Abaqus/Explicit combined with user-defined materials. As real birds have flesh, blood, and bones, the team endeavored to make the bird simulation as realistic as possible. The bird was modeled using a Lagrangian approach with an elastic-plastic with shear failure criteria. The shear failure criteria and the tensile failure were selected to identify the damage of bird and windshield, respectively. The supporting structure of the windshield glass was modeled with skins and rubber gaskets.

The analysis results included the instantaneous deformation of bird and windshield, the damage modes of the windshield, and displacement curves and strain curves of the measured points on the windshield. The maximum windshield displacement after bird impact exceeded 60mm—more than three times the thickness of the windshield—and the damage incurred by the simulated windshield closely mirrored the windshield from the physical experiment.

The comparison between the simulation results and the experiment demonstrated that Abaqus FEA provides a high level of accuracy in the analysis of bird strike on aircraft windshields. Now that the bird and windshield models have been established, Abaqus FEA can be used to analyze bird impact at various locations, under alternative conditions which can't be physically tested due to cost, time, and human resource constraints. Simulation results can also be used to improve the structural response of proposed windshield designs before any physical prototyping is carried out.

This article is an excerpt from an AIAA technical paper accepted to the 2009 AIAA/ASME/ASCE/AHS/ASC Structures, Structural Dynamics, and Materials Conference titled "Experiment and Numerical Simulation of a Full-Scale Aircraft Windshield Subjected to Bird Impact" by Shuhua Zhu, Mingbo Tong, and Yuequan Wang from the Key Laboratory of Fundamental Science for National Defense-Advanced Design Technology of Flight Vehicle, Nanjing University of Aeronautics & Astronautics, Nanjing, China.

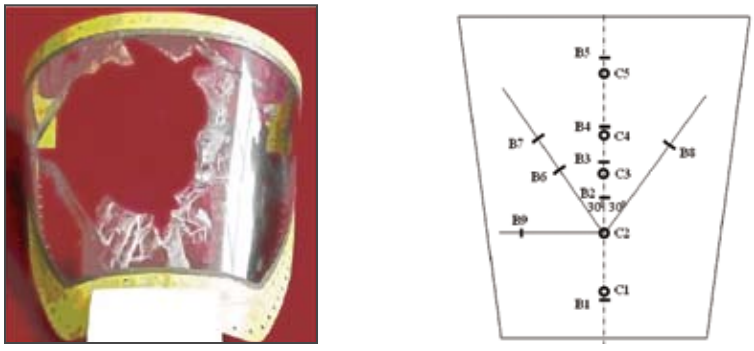

(Left) Windshield damage. (Right) Location of displacement transducer and strain sensor.

For More Information
www.nuaa.edu.cn/english/english.htm

Lakehead University Team Uses Abaqus in Bridge Competition

An engineering team from Lakehead University in Ontario, Canada recently earned recognition in what is considered to be the premier event for American civil engineering students: the 18th Annual AISC/ASCE U.S. National Student Steel Bridge Competition.

This intercollegiate event, which challenges students to design and build a 1/10 scale steel model for replacement of a century-old bridge that crosses a river and wetlands, encourages participants to push the limits of structural engineering—precise and thorough structural analysis is critical to success. Bridge concepts are judged on a combination of construction speed, loaded deflection, and self weight. Bridge design and fabrication take place prior to the actual competition.

After qualifying with a first-place finish in the Mid-West Regional Competition, the Lakehead University team went on to compete against 46 other teams at the 2009 national event in Las Vegas. The team's strategy was to design the bridge, select a final design, and then address concerns regarding the structure's overall stability before beginning construction. The team used Abaqus FEA software for their project and found it to be an extremely effective program for 3-D modeling and analysis.

The Lakehead team began modeling the bridge by sketching the 2-D truss and girder using coordinates derived from a conceptual AutoCAD rendering. Next, the frame was offset the width of the bridge by copying and translating the instance. Using the point-to-point drawing function, girder points were then connected with the proposed cross-bracing design. Tubular sections were assigned, and a 2,500-lb. load was applied for a buckling analysis. By switching through possible failure modes and their associated eigenvalues, the team got a true understanding of the structure they were creating. A worst-case eigenvalue of 3.01 confirmed the stability of the bridge with a satisfactory factor of safety, and a stress analysis was also completed on the structure to confirm the structural analysis.

The Student Steel Bridge Competition required university teams to assemble their bridges as quickly as possible, and the Lakehead team accomplished this in 3.78 minutes. After assembly, the bridges were tested for stiffness and deflection by bearing a load of one hundred 25-lb. lengths of angle iron for a total load of 2,500 lbs. to simulate a loaded truck crossing the bridge. The bridges were then unloaded and weighed, and the Lakehead bridge came in at 144.2 lbs. The lateral strength and cross-bracing design was also tested under a 50-lb. load applied horizontally to the structure. Abaqus was used to confirm that lateral deflections did not exceed the one-inch limit dictated by competition rules. Deflection results of approximately ¾-inch confirmed the proposed cross-brace design.

Scores among the top six teams were extremely close, and the Lakehead University team earned third place overall. This is the fifth time that Lakehead has placed in the top five overall in the competition, and is especially notable given that the Lakehead team is the only Canadian team to place in the top five since the competition's inception.



(Top) Front row: Robert McDonald, Dr. Timo Tikka (Faculty Advisor, kneeling), Jeffery Luckai. Back row: Conrad Hagstrom (Advisor), Gavin Clements, Jesse Zylstra, Fred Lavoie. Inset: team in action at the competition.

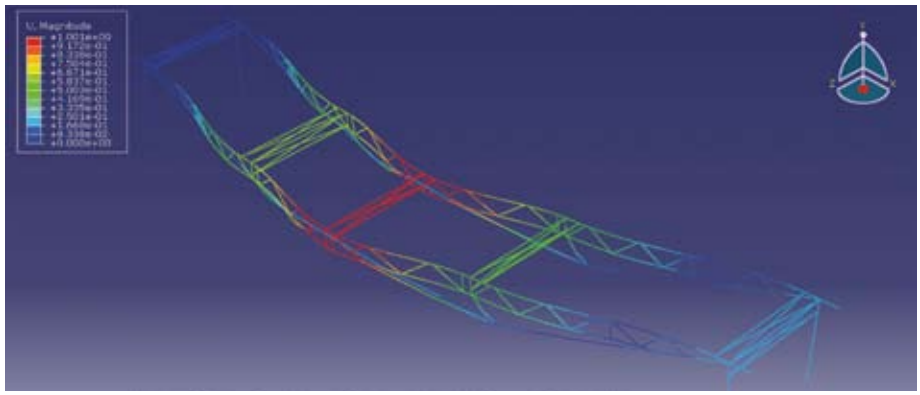

Abaqus analysis of Lakehead University's bridge design showing applied load.

The Lakehead University team found Abaqus FEA software to be an effective and advantageous tool for designing their entry in the competition. Learning and utilizing the software also gave the students finite element software experience that they felt will be extremely valuable in their careers.

For More Information
engineering.lakehead.ca

Meeting Regulatory Requirements with FEA

Dr. Ken Perry, President, ECHOBIO LLC

I recently returned from a workshop on Computer Methods for Cardiovascular Devices sponsored by the Federal Drug Administration, the National Heart, Lung, and Blood Institute, and the National Science foundation. The workshop provided an audience of regulatory, academic, and industrial professionals a chance to catch up on state-of-the-art trends and exchange ideas in using computational methods to support regulatory filings for medical devices. Surprisingly, a general theme emerged for me during the workshop: **We are not providing the FDA with adequate validation of our computational models!**

For years I've been helping companies demonstrate the safety and effectiveness of their products. I've written several FEA reports that have been reviewed and accepted by the agency—including cases where we've argued to forgo expensive and time-consuming durability testing in lieu of providing computational results to support safety claims. It has been my experience that the FDA has been very open to such an approach, provided there is an adequate demonstration of the validity of the FEA models.

However, from what I heard at the workshop, the typical submission of FEA results does not include adequate validation. It is not clear to me if this problem is due to companies not knowing how to perform validation—or not knowing what data to provide for validation of their FEA models. Maybe companies are reluctant to share data that the FDA has not specifically asked for, or maybe they have unreasonable expectations about what computational models can replace in terms of physical testing. Whatever the reason, it is clear that if we want to leverage FEA to streamline the development and regulatory approval process, we need to take a proactive role in demonstrating how well our models describe our products.

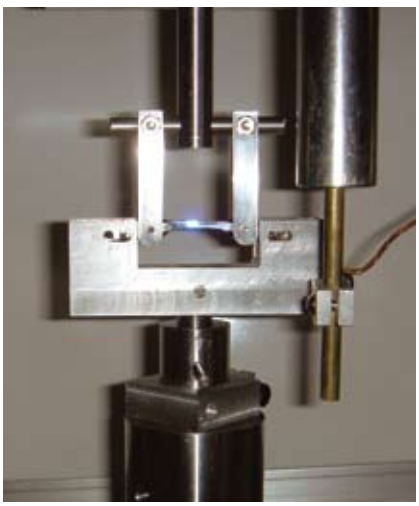

Nitinol four-point bend test sample with moiré interferometry diffraction grating used for material characterization.

> "...engineers need to establish the validity of our computational models...BEFORE we submit results to the FDA."
>
> *—Dr. Ken Perry*

In more than ten years of experience in the field, I have yet to run across a device or a specified test or loading scenario that I could not analyze using Abaqus FEA software and achieve excellent agreement between experiment and computer simulation. Many times the endeavor to match experiment and analysis reveals critical insight into the mechanics of the product involved or nuances associated with the loading conditions that lead to important improvements. With advanced contact, strong nonlinear capabilities, and the extensibility of user subroutines, Abaqus provides a platform to model almost any physical scenario—giving the engineer and product designer a highly capable toolkit for validating any device.

As open and receptive as the FDA may be, engineers need to establish the validity of our computational models, and we need to do so BEFORE we submit results to the FDA. This effort needs to begin early in the development process—before we make decisions based on computational data. Otherwise, how can we expect the FDA to accept that our results have emerged from a rigorous engineering methodology?

How much and what type of validation is necessary in any given case depends on how a model is going to be used. Conversely, the confidence we have in a computational model depends on how extensively it has been applied and shown to agree with reality. There are numerous opportunities during the development process to establish the validity of our computational models. Radial force testing of different stent designs, for example, provides an excellent opportunity to confirm our model's ability to predict reality.



Strain contour data from a stent fatigue analysis.

The time is right for advancing the use of computational models for demonstrating the safety of our products. We need to be proactive and utilize models that are well-grounded in experimental data. How far we are able to leverage these results with the FDA will depend on how good of a job we do at convincing them that they represent actual experience.



Dr. Perry is the inventor, designer, and developer of over twenty implantable medical devices and has broad technical experience throughout all aspects of product development. He is president of ECHOBIO LLC, an engineering company that designs, analyzes, and tests implantable medical devices. Dr. Perry participates on the American Society for Testing and Materials (ASTM) F04 committee for Medical and Surgical Materials and Devices, among other professional societies.

He holds a Ph.D. in Mechanics of Materials from Strathclyde University, Glasgow, Scotland and a Bachelors degree in Engineering Science and Mechanics from the Georgia Institute of Technology.

Keep up with Dr. Perry at his blogsite at http://drperry.org/

2010 SIMULIA Customer Conference

May 25–27 • Advanced Seminars May 24
Rhode Island Convention Center • Providence, Rhode Island, USA



Call for Papers – Deadline: November 9, 2009







The 2010 SCC will be held in Providence, RI, near SIMULIA's world headquarters. Abstracts for contributed papers are now being accepted for possible inclusion in the 2010 SIMULIA Customer Conference. Users of Abaqus FEA, Isight, Fiper, and SIMULIA SLM are encouraged to submit industry-focused topics including applications in automotive, aerospace, electronics, medical devices, consumer goods, and energy, among others.

The SCC 2010 will once again bring together an international community of realistic simulation users and provide a unique opportunity for our customers to share their own experiences and learn from others.

Suggested technical topics include: simulation automation, distributed/high-performance computing, design optimization, linear and nonlinear dynamics, thermal, composites, impact durability and fatigue, noise and vibration, acoustics, fluid-structure interaction, simulation data and process management, and other related topics.

We invite all of our worldwide customers to submit abstracts about their use of any of our solutions for consideration for presentation at the SCC 2010.

Benefits of Presenting:

- Enhance your professional credentials by being published in the Conference Proceedings, which is distributed internationally.
- Receive a $100 discount on your registration fee to the conference and a $100 discount on the Advanced Seminar fee.
- Gain recognition as an expert in your field in the simulation community.
- Establish beneficial industry contacts.

For More Information
www.simulia.com/events/scc

2009 RUM Schedule

Attend the upcoming Regional Users' Meeting in your area. Learn about the latest enhancements to our products and the ongoing strategy of SIMULIA.

Americas

Date	Location
October 21	Houston, TX
October 27	Seattle, WA
October 28	Bay Area, CA
October 29	Los Angeles, CA
November 10	Plymouth, MI

Europe/Middle East/South Africa

Date	Location
October 22	Athens, Greece
October 23	Volos, Greece
November 6	Barcelona, Spain
November 9–10	Graz, Austria
November 10	Paris, France
November 12–13	Netherlands
November 12–13	Istanbul, Turkey
November 19–20	Poznań, Poland
November 25	Israel

Asia Pacific

Date	Location
October 22–23	Penang, Malaysia
October 27	Tokyo, Japan
October 30	Osaka, Japan
November 3–4	Taipei City, Taiwan

For More Information
www.simulia.com/events/rums

SIMULIA Helps Get Me There.



Simulation for the Real World

Aircraft manufacturers are using advanced composites to create the next generation of quieter, more comfortable airliners. Our customers use SIMULIA solutions to understand the behavior and improve the application of composite materials for aerostructures. We partner with our customers to invent new methods and deploy realistic simulation technology, which helps them drive innovation and make flights more relaxing.

SIMULIA is the Dassault Systèmes Brand for Realistic Simulation. We provide the Abaqus product suite for Unified Finite Element Analysis, multiphysics solutions for insight into challenging engineering problems, and an open PLM platform for managing simulation data, processes, and intellectual property.

Learn more at: **www.simulia.com/ae07**

SIMULIA

www.3ds.com

The 3DS logo, SIMULIA, CATIA, 3DVIA, DELMIA, ENOVIA, SolidWorks, Abaqus, Isight, Fiper, and Unified FEA are trademarks or registered trademarks of Dassault Systèmes or its subsidiaries in the US and/or other countries. Other company, product, and service names may be trademarks or service marks of their respective owners. Copyright Dassault Systèmes, 2009