SIMULIA

3DEXPERIENCE®

CST STUDIO SUITE DATASHEET

VNA-based Filter Tuning with Filter Designer 3D in CST Studio Suite

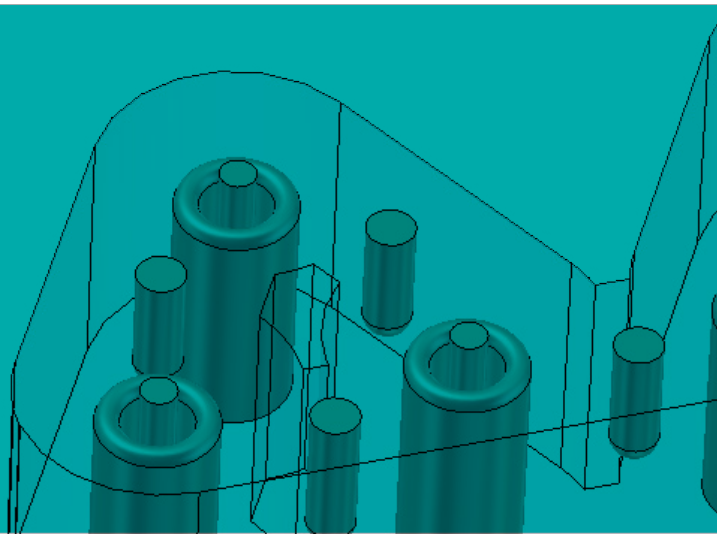

Filter Designer 3D in CST Studio Suite® is a complete synthesis tool for bandpass and diplexer filters. It provides a range of solutions throughout the design process of a coupled-resonator filter and even goes beyond with its VNA-based tuning capability. Filter Designer 3D provides assistive tuning for filter hardware that can significantly reduce the time spent getting a device to meet the expected specifications.

HOW DOES IT WORK?

- Connect the computer to a Vector Network Analyzer (VNA).
- The Filter Designer 3D software reads the measured data in real-time.
- Based on the selected filter topology, the software extracts a coupling matrix from the measured S-parameters.
- Error bars indicate how far couplings and self-resonances are detuned.
- This information is used to easily tune up the filter hardware through its tuning mechanisms – e.g. screws, variable capacitors, varactor diodes, etc.

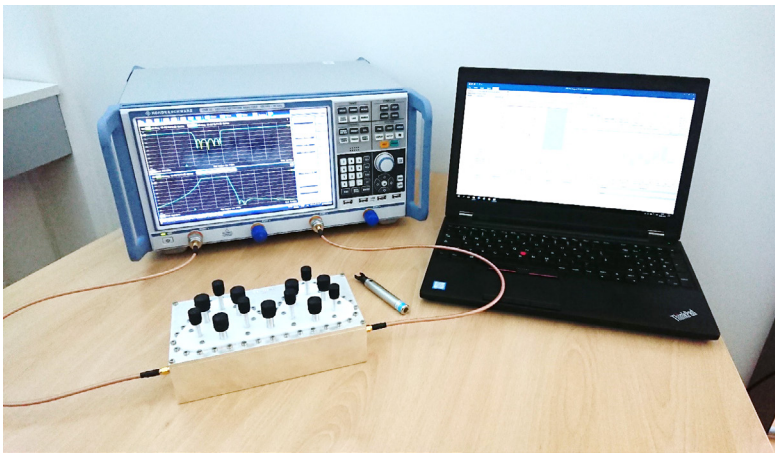

VNA tuning set-up with CST Filter Designer 3D.

DASSAULT SYSTEMES

FILTER HARDWARE EXAMPLE

This example consists of a combline style coaxial resonator filter. It has a 6 order response with two transmission zeros just above the passband. The filter topology itself consists of two cascaded triplet sections.

The manufactured device is shown on the right, with the tuning screws of the resonators indicated by the numbers in red. Below is the Filter Designer 3D environment with the measured S-parameters read directly from the VNA. The error bars below the coupling matrix indicate how far each matrix element is from the optimal solution.

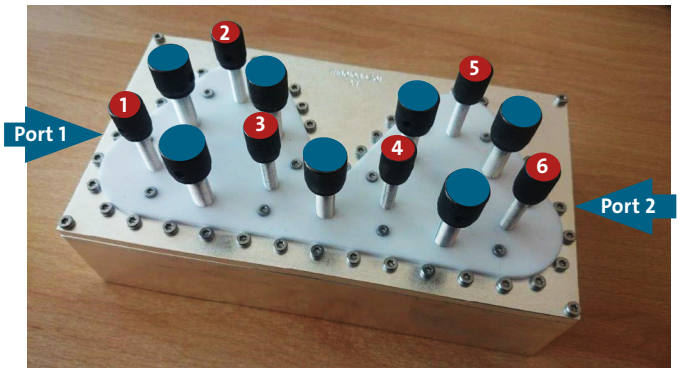

Filter with resonators numbered.

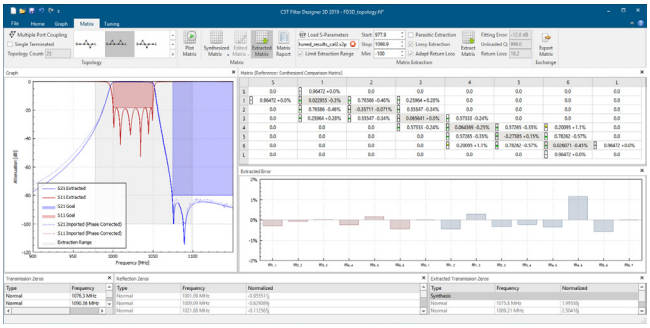

The CST Filter Designer 3D interface, showing the coupling matrix.

MEASUREMENT MEETS SIMULATION

The model was designed using Filter Designer 3D and simulated in CST Studio Suite. Given an accurate manufacturing process, it is expected to get the same response from the measurements when the hardware is tuned towards the synthesized coupling matrix.

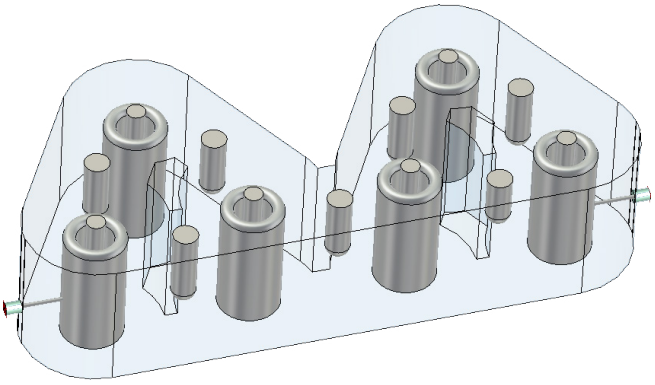

Simulation model of the filter, and the measured and simulated response.

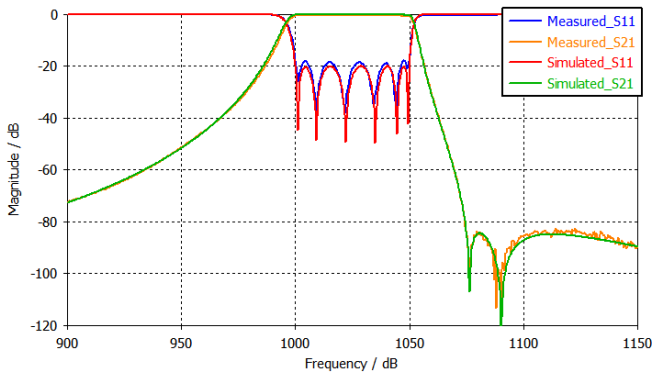

Our **3D**EXPERIENCE® platform powers our brand applications, serving 12 industries, and provides a rich portfolio of industry solution experiences.

Dassault Systèmes, the **3D**EXPERIENCE® Company, provides business and people with virtual universes to imagine sustainable innovations. Its world-leading solutions transform the way products are designed, produced, and supported. Dassault Systèmes' collaborative solutions foster social innovation, expanding possibilities for the virtual world to improve the real world. The group brings value to over 210,000 customers of all sizes in all industries in more than 140 countries. For more information, visit **www.3ds.com**.

3DEXPERIENCE®

©2019 Dassault Systèmes. All rights reserved. **3DEXPERIENCE®**, the Compass icon, the 3DS logo, CATIA, SOLIDWORKS, ENOVIA, DELMIA, SIMULIA, GEOVIA, EXALEAD, 3D VIA, 3DSWYM, BIOVIA, NETVIBES, IFWE and 3DEXCITE are commercial trademarks or registered trademarks of Dassault Systèmes, a French "société européenne" (Versailles Commercial Register # B 322 306 440), or its subsidiaries in the United States and/or other countries. All other trademarks are owned by their respective owners. Use of any Dassault Systèmes or its subsidiaries trademarks is subject to their express written approval.

DASSAULT SYSTEMES | The **3D**EXPERIENCE® Company

Americas
Dassault Systèmes
175 Wyman Street
Waltham, Massachusetts
02451-1223
USA

Europe/Middle East/Africa
Dassault Systèmes
10, rue Marcel Dassault
CS 40501
78946 Vélizy-Villacoublay Cedex
France

Asia-Pacific
Dassault Systèmes K.K.
ThinkPark Tower
2-1-1 Osaki, Shinagawa-ku,
Tokyo 141-6020
Japan