Linear Dynamics with Abaqus

6.14

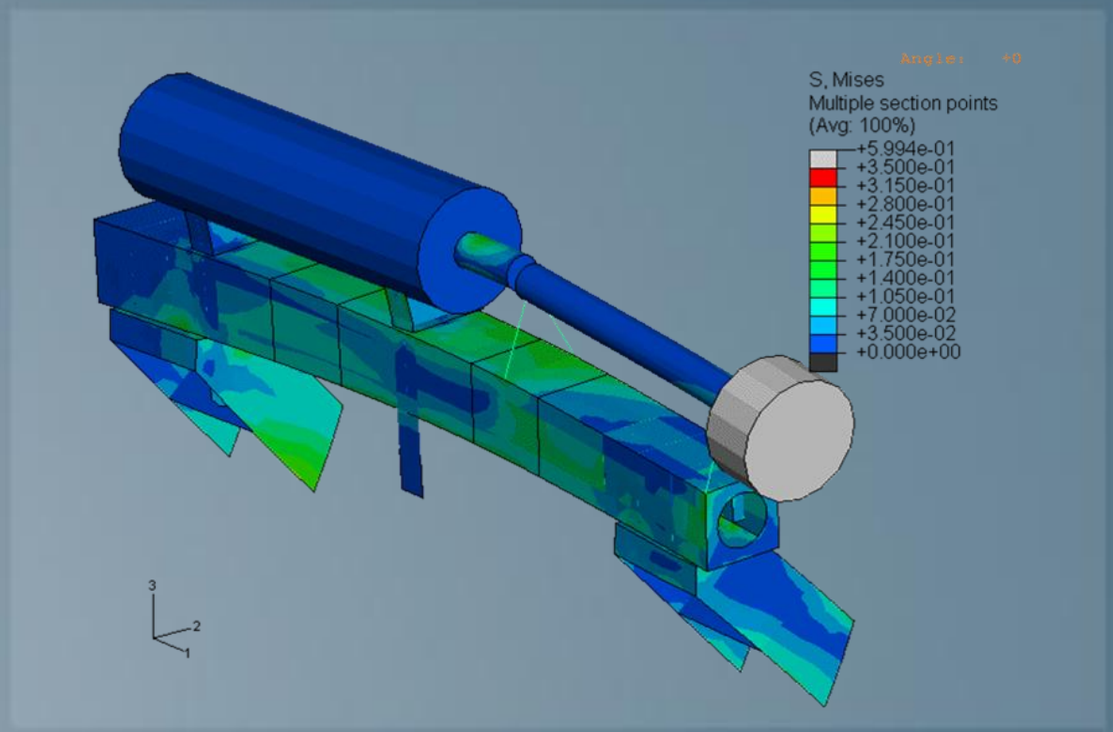

3DEXPERIENCE

About this Course

Course objectives

Upon completion of this course you will be able to:

- Extract eigenmodes about a certain frequency
- Determine whether the number of extracted eigenmodes is sufficient to represent the structure's response adequately
- Perform transient, steady-state, response spectrum and random response analyses using the eigenmodes
- Use multiple base motions
- Apply damping in linear problems

Targeted audience

Simulation Analysts

Prerequisites

This course is recommended for engineers with experience using Abaqus

2 days

Day 1

- Lecture 1: Introduction to Abaqus Linear Dynamics
- Lecture 2: Extracting Real Eigenvalues
  - Workshop 1: Eigenvalue Natural Frequency Extraction
- Lecture 3: Damping and Modal Superposition
- Lecture 4: Base Motion Excitation
- Lecture 5: Modal Transient Dynamics
  - Workshop 2: Modal Dynamics

Day 2

- Lecture 6: Response Spectrum Analysis
  - Workshop 3: Response Spectrum
- Lecture 7: Steady-State Harmonic Response
  - Workshop 4: Steady-State Dynamics
- Lecture 8: Introduction to Random Response
  - Workshop 5: Random Response Analysis
- Lecture 9: Complex Eigenvalue Analysis

Additional Material

- Appendix 1: Introduction to Nonlinear Dynamics
- Appendix 2: Nonlinear Dynamics: Abaqus Usage
- Appendix 3: Nonlinear Dynamics Examples

Join the Community!

How can you maximize the robust technology of Abaqus FEA and Isight?

Connect with peers to share knowledge and get technical insights

SIMULIA

Let the SIMULIA Learning Community be *Your* Portal to 21st Century Innovation

Discover new ways to explore how to leverage realistic simulation to drive product innovation. Join the thousands of Abaqus and Isight users who are already gaining valuable knowledge from the SIMULIA Learning Community.

For more information and registration, visit **3ds.com/simulia-learning**.
Connect. Share. Spark Innovation.

DASSAULT SYSTEMES | The **3D**EXPERIENCE Company

©2013 Dassault Systèmes. All rights reserved.

Legal Notices

The Abaqus Software described in this documentation is available only under license from Dassault Systèmes or its subsidiary and may be used or reproduced only in accordance with the terms of such license.

This documentation and the software described in this documentation are subject to change without prior notice.

Dassault Systèmes and its subsidiaries shall not be responsible for the consequences of any errors or omissions that may appear in this documentation.

No part of this documentation may be reproduced or distributed in any form without prior written permission of Dassault Systèmes or its subsidiary.

© Dassault Systèmes, 2014

Printed in the United States of America.

Abaqus, the 3DS logo, SIMULIA, and CATIA are trademarks or registered trademarks of Dassault Systèmes or its subsidiaries in the US and/or other countries.

Other company, product, and service names may be trademarks or service marks of their respective owners. For additional information concerning trademarks, copyrights, and licenses, see the Legal Notices in the Abaqus 6.14 Installation and Licensing Guide.

Revision Status

Lecture 1	5/14	Updated for 6.14
Lecture 2	5/14	Updated for 6.14
Lecture 3	5/14	Updated for 6.14
Lecture 4	5/14	Updated for 6.14
Lecture 5	5/14	Updated for 6.14
Lecture 6	5/14	Updated for 6.14
Lecture 7	5/14	Updated for 6.14
Lecture 8	5/14	Updated for 6.14
Lecture 9	5/14	Updated for 6.14
Appendix 1	5/14	Updated for 6.14
Appendix 2	5/14	Updated for 6.14
Appendix 3	5/14	Updated for 6.14
Workshop 1	5/14	Updated for 6.14
Workshop 2	5/14	Updated for 6.14
Workshop 3	5/14	Updated for 6.14
Workshop 4	5/14	Updated for 6.14
Workshop 5	5/14	Updated for 6.14

Lesson 1: Introduction to Abaqus Linear Dynamics

Lesson content:

- Dynamic Response
- When to Consider Dynamic Effects
- Linear Dynamics Procedures
- Linear Dynamics Software Architecture

www.3ds.com | © Dassault Systèmes

Lesson 2: Extracting Real Eigenvalues

Lesson content:

- Problem Formulation
- Eigenvalue Solution Methods
- Example: Engine Block Frequency Extraction
- Frequency Output
- Frequencies of Preloaded Structures
- Extracting Repeated Eigenfrequencies
- Residual Modes
- Workshop Model Description
- Workshop Preliminaries
- Workshop 1: Eigenvalue Natural Frequency Extraction (IA)
- Workshop 1: Eigenvalue Natural Frequency Extraction (KW)

Both interactive (IA) and keywords (KW) versions of the workshop are provided. Complete only one.

3 hours

www.3ds.com | © Dassault Systèmes

Lesson 3: Damping and Modal Superposition

Lesson content:

- Introduction
- Damping in Direct Solutions
- Damping in Modal Subspace Projection Solutions
- Damping in Modal Superposition Procedures
- Material Damping
- Element Damping
- Global Damping
- Modal Damping
- Damping Controls
- Summary

www.3ds.com | © Dassault Systèmes

1.5 hours

Lesson 4: Base Motion Excitation

Lesson content:

- Introduction
- Primary Base Motion
- Secondary Base Motions
- Usage
- Example

www.3ds.com | © Dassault Systèmes

45 minutes

Lesson 5: Modal Transient Dynamics

Lesson content:

- Introduction
- Excitation and Output
- Example
- Subspace Solutions for Transient Dynamics
- Workshop 2: Modal Dynamics (IA)
- Workshop 2: Modal Dynamics (KW)

Both interactive (IA) and keywords (KW) versions of the workshop are provided. Complete only one.

2 hours

www.3ds.com | © Dassault Systèmes

Lesson 6: Response Spectrum Analysis

Lesson content:

- Introduction
- The Response Spectrum
- Determining Peak Modal Response
- Modal Summation Methods
- Combining Results from Multiple Spectrums
- Spectrum Definition
- Response Spectrum Usage
- Response Spectrum Example
- Workshop 3: Response Spectrum (IA)
- Workshop 3: Response Spectrum (KW)

Both interactive (IA) and keywords (KW) versions of the workshop are provided. Complete only one.

2 hours

www.3ds.com | © Dassault Systèmes

Lesson 7: Steady-State Harmonic Response

Lesson content:

- Introduction
- Steady-State Dynamics Solution Procedures
- Excitation and Output
- Steady-State Dynamics Usage
- Comparative Example
- Workshop 4: Steady-State Dynamics (IA)
- Workshop 4: Steady-State Dynamics (KW)

Both interactive (IA) and keywords (KW) versions of the workshop are provided. Complete only one.

2 hours

www.3ds.com | © Dassault Systèmes

Lesson 8: Introduction to Random Response

Lesson content:

- Overview
- Excitation and Output
- Random Response Usage
- Base Motion Example
- Steady-State Dynamics Alternative Approach
- Workshop 5: Random Response Analysis (IA)
- Workshop 5: Random Response Analysis (KW)

Both interactive (IA) and keywords (KW) versions of the workshop are provided. Complete only one.

2 hours

www.3ds.com | © Dassault Systèmes

Lesson 9: Complex Eigenvalue Analysis

Lesson content:

- Overview
- Implementation
- Brake Squeal Analysis

www.3ds.com | © Dassault Systèmes

75 minutes

Appendix 1: Introduction to Nonlinear Dynamics

Appendix content:

- Introduction
- Equations for Dynamic Problems
- Time integration of the equations of motion
- Automatic time incrementation
- Dynamic Contact
- Comparing Abaqus/Standard and Abaqus/Explicit

www.3ds.com | © Dassault Systèmes

45 minutes

Appendix 2: Nonlinear Dynamics: Abaqus Usage

Appendix content:

- Implicit Dynamics
- Explicit Dynamics
- Algorithmic Details
- Initial Conditions and Loads
- Stability and Accuracy of the Trapezoidal Rule
- Material Damping
- Half-Increment Residual Tolerance

www.3ds.com | © Dassault Systèmes

75 minutes

Appendix 3: Nonlinear Dynamics Examples

Appendix content:

- Damped shallow arch
- Ball impact
- Tennis racket and ball
- Crimp forming
- Blade containment
- Inertia relief

www.3ds.com | © Dassault Systèmes

1 hour